ORDER NO. VRD8704123

Service Manual

General Description
Adjustment Procedures
Block/Schematic Diagrams
Exploded Views/Parts List

Video Cassette Recorder

National/Panasonic VHS HQ

NTSC

NV-G21PX/BR
NV-G20PX/PN
NV-G19MX
VW-DS1P

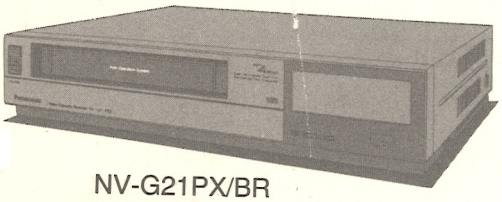

NV-G21PX/BR

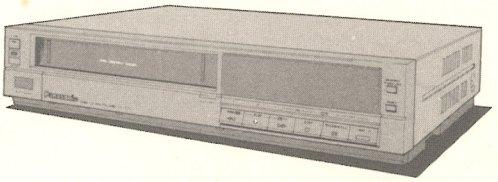

NV-G20PX/PN
NV-G19MX

SPECIFICATIONS

ITEM	SPECIFICATIONS	
POWER	SOURCE: 110~240V 50/60Hz NV-G21PX/BR, NV-G20PX/PN 120V 50/60Hz (NV-G19MX)	
	CONSUMPTION: 23 watts	
RECORDING SYSTEM	2 rotary heads, helical scanning system	
	NTSC	
TV TUNER SYSTEM	NV-G21PX/BR NV-G20PX/PN	VHF: CH2~CH13 CHA-2~CH W (EXCEPT NV-G21BR)75Ω unbalanced UHF: CH14~CH69 300Ω unbalanced
	NV-G19MX	VHF: CH2~CH6 75Ω unbalanced UHF: CH14~CH69 300Ω unbalanced
RF OUT SYSTEM	UHF: CH 3/4 $66^{+2}_{-2.5}$ dbμ, 75Ω terminated	
VIDEO	NV-G21 PX/BR	HEADS: 4 rotary heads 1 pair for recording and playback (L-R heads) 1 pair for video trick play with L' and R' heads (field still and fine slow)
	NV-G20 PX/PN NV-G19 MX	HEADS: 3 rotary heads 1 pair for recording and playback (L-R heads) 1 pc. of head for video trick playback with L' head (field still)
	INPUT: VIDEO IN CONNECTOR (Phono type) 1.0 Vp-p, 75Ω terminated	
	OUTPUT: VIDEO OUT Connector (Phono type) 1.0 Vp-p, 75Ω terminated	

ITEM	SPECIFICATIONS	
AUDIO	HEAD: 1 Stationary head	
	INPUT: ADUIO IN Connector (Phono type) More than −10dB V (316mv), more than 47kΩ	
	OUTPUT: AUDIO OUT Connector (Phono type) −8dB V (400mV), Less than 2kΩ	
TAPE SPEED & TIME	Tape Speed: SP: 33.30mm/sec. LP: 16.70mm/sec. SLP: 11.10mm/sec. Record/Playback Time: SP: 160min. with NV-T160 LP: 320min. with NV-T160 SLP: 480min. with NV-T160 FF/REW Time: 5.0 min. with NV-T120	
DIMENSIONS	NV-G21PX/BR	380(W)×82(H)×342(D) mm
	NV-G20PX/PN, NV-G19MX	380(W)×82(H)×345.5(D) mm
WEIGHT	NV-G21PX	4.8kg
	NV-G21BR	5.1kg
	NV-G20PX/PN, NV-G19MX	5.0kg
STANDARD ACCESSORIES	2 PC. Battery 1 PC. Infra-red remote controler 1 PC. 300 ohm-75ohm Transformer 1 PC. Power Plug Adaptor (NV-G21PX/BR, NV-G20PX/PN) 1 PC. Twin Lead Cable (Flat) 1 PC. Coaxial Cable with Splitter	
OPTINAL ACCESSORIES	1 PC. Digital Scanner (VW-DS1P)	

Weight and dimensions shown are approximate
Specifications are subject to change without notice.

National/Panasonic

Matsushita Electric Trading Co., Ltd.
P.O. Box 288, Central Osaka Japan

INTRODUCTION

This service manual contains technical information which will allow service technician to understand and service this model.
Section 1 presents you with some general information of features and controls, enabling you to become familiar with each function.
Section 2 contributes to your mechanical and electrical adjustment as well disassembly and replacement procedures.
In the case of very common information relating to other models like mechanical adjustments, please refer to each service manual.
Section 3 contains block diagrams which offers you information for checking and understanding each circuit. Schematic diagrams which give you detailed information such as waveforms, voltage data, function etc....
Section 4 contains exploded views and parts list.
Please place orders using the parts list and not the drawing reference numbers.
If the circuit is changed or modified, this information will be followed by supplementary service manual to be filed with original service manual.

CONTENTS

TECHNICAL INFORMATION
SECTION 1
GENERAL DESCRIPTIONS 1-1
1-1. FEATURES 1-1
1-2. CONTROLS & COMPONENTS 1-1
SECTION 2
ADJUSTMENT PROCEDURES 2-1
2-1. MECHANICAL ADJUSTMENT PROCEDURES 2-1
2-2. DISASSEMBLY METHOD 2-1
2-3. REPLACEMENT OF THE CYLINDER UNIT 2-4
2-4. ELECTRICAL ADJUSTMENT PROCEDURES 2-6
SECTION 3
BLOCK DIAGRAM & SCHEMATIC DIAGRAMS 3-1
3-1. SYSTEM CONTROL BLOCK DIAGRAM 3-1
3-2. SERVO BLOCK DIAGRAM (NV-G21PX/BR) 3-2
3-3. SERVO BLOCK DIAGRAM (NV-G20PX/PN, NV-G19MX) 3-3
3-4. LUMINANCE & CHROMINANCE BLOCK DIAGRAM 3-4
3-5. NTSC-PAL(M) CONVERTER & AUTO DETECT BLOCK DIAGRAM (NV-G21BR) 3-5
3-6. POWER C.B.A. (VEP01272A: NV-G21PX/BR, NV-G20PX/PN) 3-6
3-7. POWER C.B.A (VEP01272D: NV-G19MX) 3-6
3-8. POWER SCHEMATIC DIAGRAM (NV-G21PX/BR, NV-G20PX/PN) 3-7
3-9. POWER SCHEMATIC DIAGRAM (NV-G19MX) 3-7
3-10. SYSTEM CONTROL SCHEMATIC DIAGRAM 3-8
3-11. SYSTEM CONTROL Section In Main C.B.A 3-11
3-12. SERVO SCHEMATIC DIAGRAM (NV-G21PX/BR) 3-12
3-13. SERVO Section In Main C.B.A. (NV-G21PX/BR) 3-13
3-14. SERVO PACK C.B.A. (VEP02271C: NV-G21PX/BR) 3-13
3-15. SUB SERVO (1) PACK C.B.A. (VEP02270A: NV-G21PX/BR) 3-13
3-16. SUB SERVO (2) PACK C.B.A. (VEP02272A: NV-G21PX/BR) 3-13
3-17. CYLINDER DRIVE C.B.A. (VEP00H22A: NV-G21PX/BR) 3-13
3-18. SERVO SCHEMATIC DIAGRAM (NV-G20PX/PN, NV-G19MX) 3-14
3-19. SERVO PACK C.B.A. (VEP02284B: NV-G20PX/PN, NV-G19MX) 3-14
3-20. SUB SERVO (1) PACK C.B.A. (VEP02289B: NV-G20PX/PN, NV-G19MX) 3-14
3-21. CYLINDER DRIVE C.B.A. (VEP00H22A: NV-G20PX/PN, NV-G19MX) 3-14
3-22. LUMINANCE & CHROMINANCE SCHEMATIC DIAGRAM 3-15
3-23. LUMINANCE & CHROMINANCE Section In Main C.B.A. 3-15
3-24. LUMINANCE & CHROMINANCE PACK SCHEMATIC DIAGRAM (NV-G21PX) 3-16
3-25. LUMINANCE & CHROMINANCE PACK C.B.A. (VEP03442A: NV-G21BR) 3-16

3-26. LUMINANCE & CHROMINANCE PACK SCHEMATIC DIAGRAM (NV-G21PX, NV-G20PX/PN, NV-G19MX) 3-17
3-27. LUMINANCE & CHROMINANCE PACK C.B.A. (VEP03406A: NV-G21PX, NV-G20PX, PN, NV-G19MX) 3-17
3-28. NTSC-PAL (M) CONVERTER & AUTO DETECT SCHEMATIC DIAGRAM (NV-G21BR) 3-18
3-29. NTSC-PAL (M) CONVERTER PACK C.B.A. (VEP03408A: NV-G21BR) 3-18
3-30. AUTO DETECT PACK C.B.A. (VEP03409A: NV-G21BR) 3-18
3-31. HEAD AMP PACK C.B.A. (VEP05097A: NV-G21PX/BR) 3-18
3-32. HEAD AMP PACK SCHEMATIC DIAGRAM (NV-G21PX/BR) 3-19
3-33. HEAD AMP PACK SCHEMATIC DIAGRAM (NV-G20PX/PN, NV-G19MX) 3-20
3-34. HEAD AMP PACK C.B.A. (VEP05097H: NV-G20PX/PN, NV-G19MX) 3-21
3-35. AUDIO SCHEMATIC DIAGRAM 3-21
3-36. AUDIO Section In Main C.B.A. 3-21
3-37. OPERATION SCHEMATIC DIAGRAM (NV-G21PX/BR) 3-22
3-38. OPERATION SCHEMATIC DIAGRAM (NV-G20PX/PN, NV-G19MX) 3-22
3-39. OPERATION C.B.A. (VEP06403A: NV-G21PX, VEP06403B: NV-G21BR) 3-22
3-40. OPERATION C.B.A. (VEP06411B: NV-G20PX/PN, NV-G19MX) 3-22
3-41. CH SELECT Section In Main C.B.A. (NV-G21PX/BR) 3-22
3-42. BUZZER PACK C.B.A. (VEP00H50A) 3-22
3-43. CH SELECT SCHEMATIC DIAGRAM (NV-G21PX/BR) 3-23
3-44. CH SELECT SCHEMATIC DIAGRAM (NV-G20PX/PN, NV-G19MX) 3-24
3-45. CH SELECT section In Main C.B.A. (NV-G20PX/PN, NV-G19MX) 3-25
3-46. BUZZER PACK C.B.A. (VEP00H50A) 3-25
3-47. TIMER SCHEMATIC DIAGRAM (NV-G20PX, NV-G19MX) 3-25
3-48. TIMER C.B.A. (VEP07401A: NV-G20PX/PN, NV-G19MX) 3-25
3-49. TIMER SCHEMATIC DIAGRAM (NV-G21PX/BR) 3-26
3-50. TIMER C.B.A. (VEP07402A: NV-G21PX) (VEP07402C: NV-G21BR) 3-26
3-51. TV DEMODULATOR PACK & TUNER/ARU PACK SCHEMATIC DIAGRAM (NV-G21PX/BR) 3-27
3-52. TV DEMODULATOR PACK C.B.A. & TUNER/ARU PACK C.B.A. (VEP07348F: NV-G21PX) (VEP07348G: NV-G21BR) 3-27
3-53. TV DEMODULATOR PACK & TUNER/ARU PACK SCHEMATIC DIAGRAM (NV-G20PX/PN, NV-G19MX) 3-28
3-54. TV DEMODULATOR PACK C.B.A. & TUNER/ARU PACK C.B.A. (VEP07348G: NV-G20PX/PN, NV-G19MX) 3-28
3-55. RF CONVERTER SCHEMATIC DIAGRAM 3-29
3-56. RF CONVERTER C.B.A. 3-29
3-57. PROGRAMMABLE REMOTE CONTROL UNIT SCHEMATIC DIAGRAM (NV-G21PX/BR) 3-29
3-58. PROGRAMMABLE REMOTE CONTROL UNIT C.B.A. 3-29
3-59. PROGRAMMABLE REMOTE CONTROL UNIT SCHEMATIC DIAGRAM (NV-G20PX/PN, NV-G19MX) 3-29
3-60. PROGRAMMABLE REMOTE CONTROL UNIT C.B.A. 3-29
3-61. MAIN C.B.A. (VEP03407A: NV-G21PX, VEP03407E: NV-G21BR), (VEP03407B: NV-G20PX, NV-G19MX, VEP03407C: NV-G20PN) 3-30
3-62. CIRCUIT BOARD LAYOUT (NV-G20PX/PN, NV-G19MX) 3-31
3-63. INTERCONNECTION SCHEMATIC DIAGRAM (NV-G20PX/PN, NV-G19MX) 3-32
3-64. ICs & TRs INFORMATION (NV-G21PX/BR) 3-32
3-65. CIRCUIT BOARD LAYOUT (NV-G21PX/BR) (NV-G21PX/BR) 3-32
3-66. INTERCONNECTION SCHEMATIC DIAGRAM 3-33

SECTION 4

EXPLODED VIEWS & PARTS LIST 4-1
4-1. EXPLODED VIEWS 4-1
1. CHASSIS PARTS SECTION (1) 4-1
2. CHASSIS PARTS SECTION (2) 4-1
3. CHASSIS UP MECHANISM SECTION 4-1
4. CASING PARTS SECTION 4-2
5. PACKING PARTS SECTION 4-4
6. PROGRMMABLE REMOTE CONTROL UNIT 4-5
DIGITAL SCANNER
MECHANICAL REPLACEMENT PARTS LIST
ELECTRICAL REPLACEMENT PARTS LIST

SAFETY PRECAUTIONS

GENERAL GUIDELINES

1. When servicing, observe the original lead dress. If a short circuit is found, replace all parts which have been overheated or damaged by the short circuit.
2. After servicing, see to it that all the protective devices such as insulation barriers, insulation papers shields are properly installed.
3. After servicing, make the following leakage current checks to prevent the customer from being exposed to shock hazards.

LEAKAGE CURRENT COLD CHECK

1. Unplug the AC cord and connect a jumper between the two prongs on the plug.
2. Measure the resistance value, with an ohmmeter, between the jumpered AC plug and each exposed metallic cabinet part on the equipment such as screwheads, connectors, control shafts, etc. When the exposed metallic part has a return path to the chassis, the reading should be between 1 MΩ and 5.2 MΩ.
   When the exposed metal does not have a return path to the chassis, the reading must be ∞.

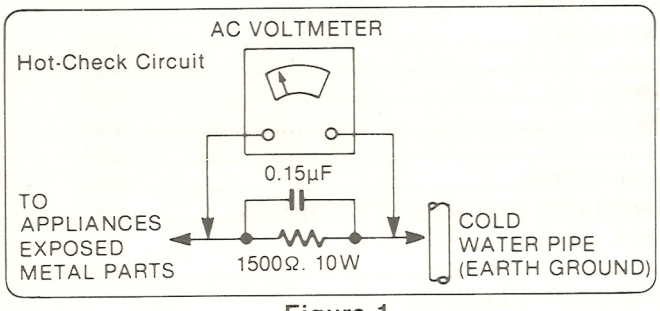

Figure 1

LEAKAGE CURRENT HOT CHECK (See Figure 1)

1. Plug the AC cord directly into the AC outlet. Do not use an isolation transformer for this check.
2. Connect a 1.5 kΩ, 10 watts resistor, in parallel with a 0.15μF capacitor, between each exposed metallic part on the set and a good earth ground such as a water pipe, as shown in Figure 1.
3. Use an AC voltmeter, with 1000 ohms/volt or more sensitivity, to measure the potential across the resistor.
4. Check each exposed metallic part, and measure the voltage at each point.
5. Reverse the AC plug in the AC outlet repeat each of the above measurements.
6. The potential at any point should not exceed 0.75 volts RMS. A leakage current tester (Simpson Model 229 equivalent) may be used to make the hot checks, leakage current must not exceed 1/2 milliamp. In case a measurement is outside of the limits specified, there is a possibility of a shock hazard, and the equipment should be repaired and rechecked before it is returned to the customer.

ELECTROSTATICALLY SENSITIVE (ES) DEVICES

Some semiconductor (solid state) devices can be damaged easily by static electricity. Such components commonly are called Electrostatically Sensitive (ES) Devices. Examples of typical ES devices are integrated circuits and some field-effect transistors and semiconductor "chip" components. The following techniques should be used to help reduce the incidence of component damage caused by static electricity.

1. Immediately before handling any semiconductor component or semiconductor-equipped assembly, drain off any electrostatic charge on your body by touching a known earth ground. Alternatively, obtain and wear a commercially available discharging wrist strap device, which should be removed for potential shock reasons prior to applying power to the unit under test.
2. After removing an electrical assembly equipped with ES devices, place the assembly on a conductive surface such as aluminum foil, to prevent electrostatic charge buildup or exposure of the assembly.
3. Use only a grounded-tip soldering iron to solder or unsolder ES devices.
4. Use only an anti-static solder removal device. Some solder removal devices not classified as "anti-static" can generate electrical charges sufficient to damage ES devices.
5. Do not use freon-propelled chemicals. These can generate electrical charges sufficient to damage ES devices.
6. Do not remove a replacement ES device from its protective package until immediately before you are ready to install it. (Most replacement ES devices are packaged with leads electrically shorted together by conductive foam, aluminum foil or comparable conductive material).
7. Immediately before removing the protective material from the leads of a replacement ES device, touch the protective material to the chassis or circuit assembly into which the device will be installed.
   CAUTION: Be sure no power is applied to the chassis or circuit, and observe all other safety precautions.
8. Minimize bodily motions when handling unpackaged replacement ES devices. (Otherwise harmless motion such as the brushing together of your clothes fabric or the lifting of your foot from a carpeted floor can generate static electricity sufficient to damage an ES device).

Technical Information

Subject: New Mechanism (G-Mechanism) And How To Make Easier Servicing.

1. New Mechanism (G-Mechanism)

Thanks to the innovation of technology for the basis of the creation of new generation,the G–Mechanism offers the following major advantages.

(1) Low–Profile DD Cylinder Motor (LDD Cylinder).

The G–Mechanism employs an oil Film Suspension System for the DD Cylinder Motor which called the Low–Profile DD Cylinder Motor with "Hidro Dynamic Bearing".
The LDD Cylinder compared with the usual ball bearing system, reduces bearing distance, thereby enabling thinner dimensions. This also overcomes friction problems, so the 99.999% rotational precision of the DD motor can be transferred to the cylinder.

(2) Lap Time Indicator

A vast improvement over the approximate counter systems of conventional VTRs, the Lap Time Indicator gives you an exact reading of elapsed tape time in hours, minutes and seconds. This is extremely useful for indexing particular portions of the tape during playback and controlling the length of recording time. This Lap Time Indicator System owe into success to the Intermediate Loading System.

(3) Compact Mechanism

The Model of G–Mechanism is its attractively slim appearance by innovation of Compact Mechanism. The front panel is only 82mm high, just right for an audio rack.

(4) Comparison Chart

Note:
The Capatan Motor of G–Mechanism workes as a loading motor and a front Loading motor in the conventional mechanizm. This capstan motor controls all mechanical components of G–Mechanism VTR.

MECHANISM / ITEMS	Current Mechanism (D1)	New Mechanism (G)
Tape Transportation at FF/REW Mode	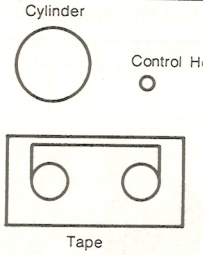	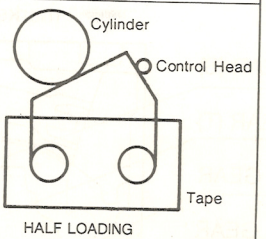
Lap Time Countor (Houp, Min., Sec.)	×	○
LDD Cylinder	×	○
Capstan Motor	○	○
Front Loading Motor	○	×
Loading Motor	○	×
Height	73mm	53mm
Size	100%	87%

2. The Phase of G-Mechanism

The phase of mechanical condition becomes very important. Pay much more attention to the phase of mechanism, when reinstall any components of mechanism, refer to the item of 2–1 Disassmbly Procedures and the item of 2–3 Mechanical Adjustment Procedures, even if installation of the Cassette Compartment , mechanical adjustment (alignment) should be performed.
The mechanical movement shows the flow chart from the drive source of capstan motor to all other main mechanical components.

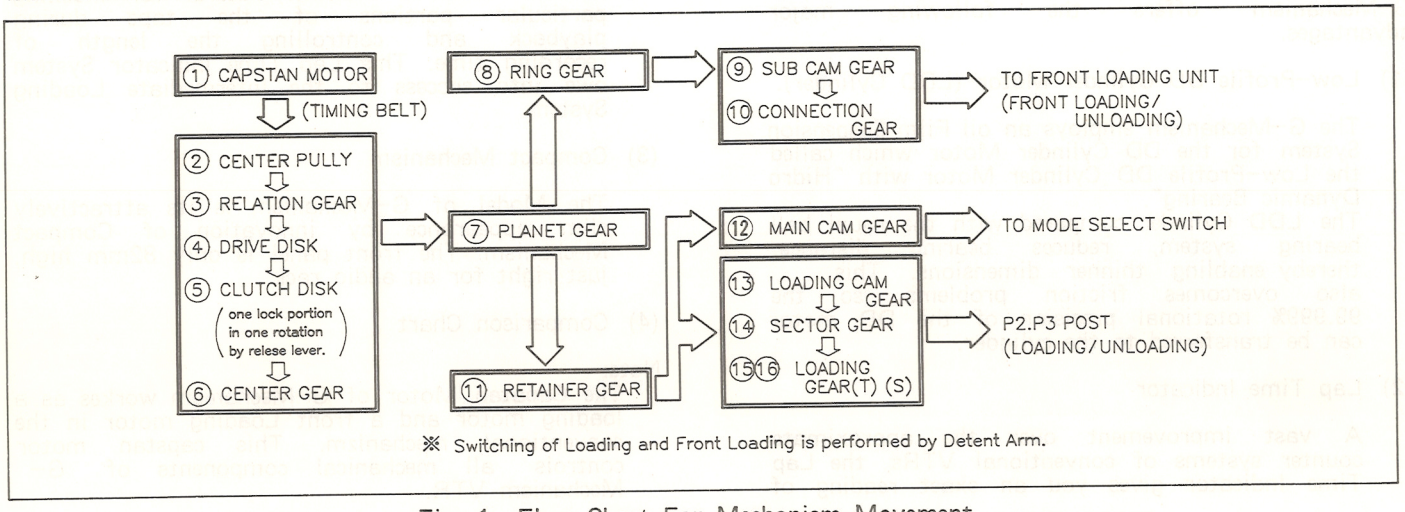

Fig. 1 Flow Chart For Mechanism Movement

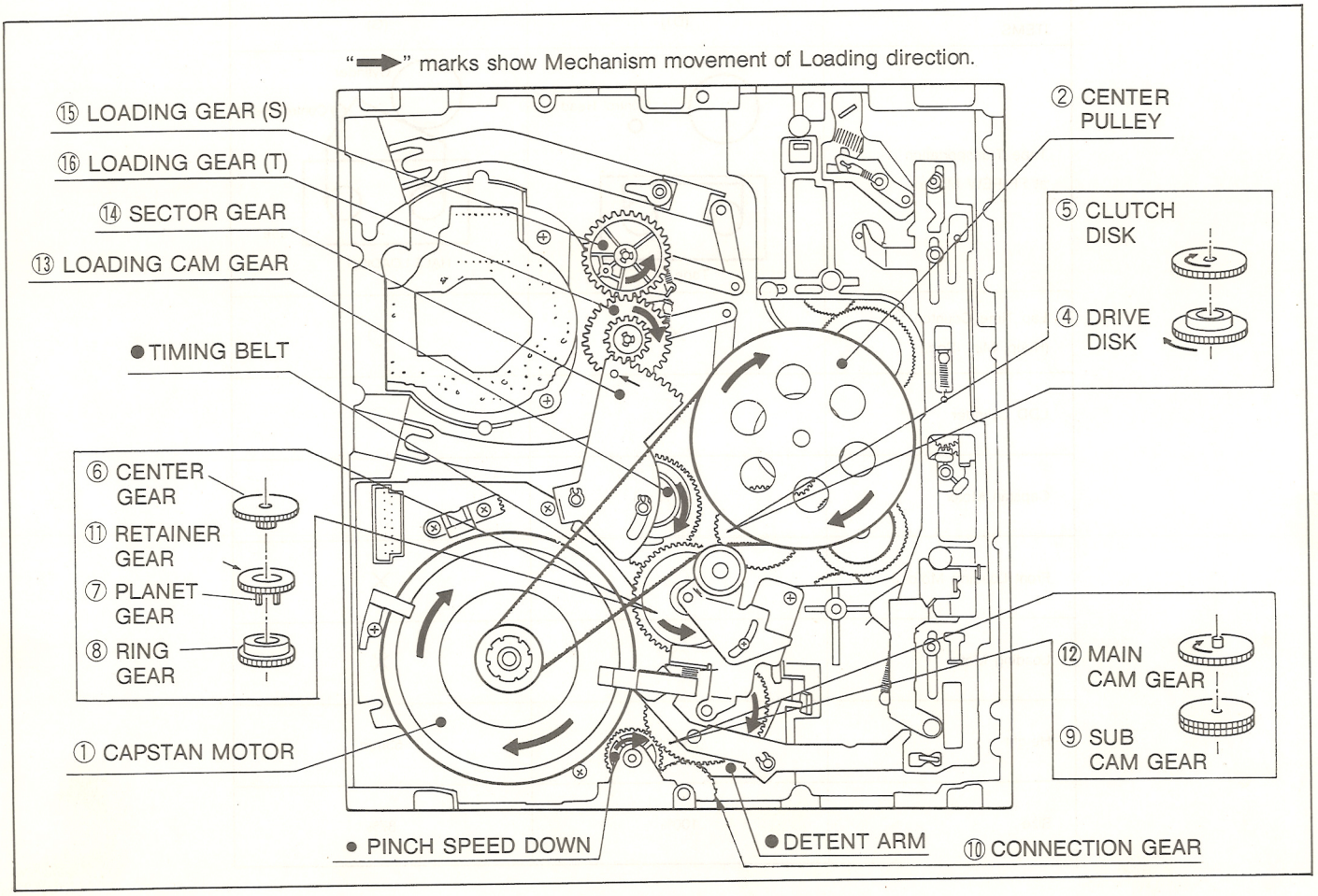

Fig. 2 Bottom View of Mechanism

3. How To Eject Manually

If the electrical circuit is defective and the action of unloading and front unloading don't work properly, it is possible to eject manually as follows.

(1) Take out the Main AC.

(2) Release the Change Lever by pushing it to arrow mark direction as shown in Fig. 3.
(3) Turn the capstan motor to counter clockwise slowly until the Clutch Disk is locked. (Clutch Disk is locked once in one rotation)
(4) Release the Change Lever again when the Cluch Disk is locked.
(5) Repeat the (2) and (3) until cassette is ejected.

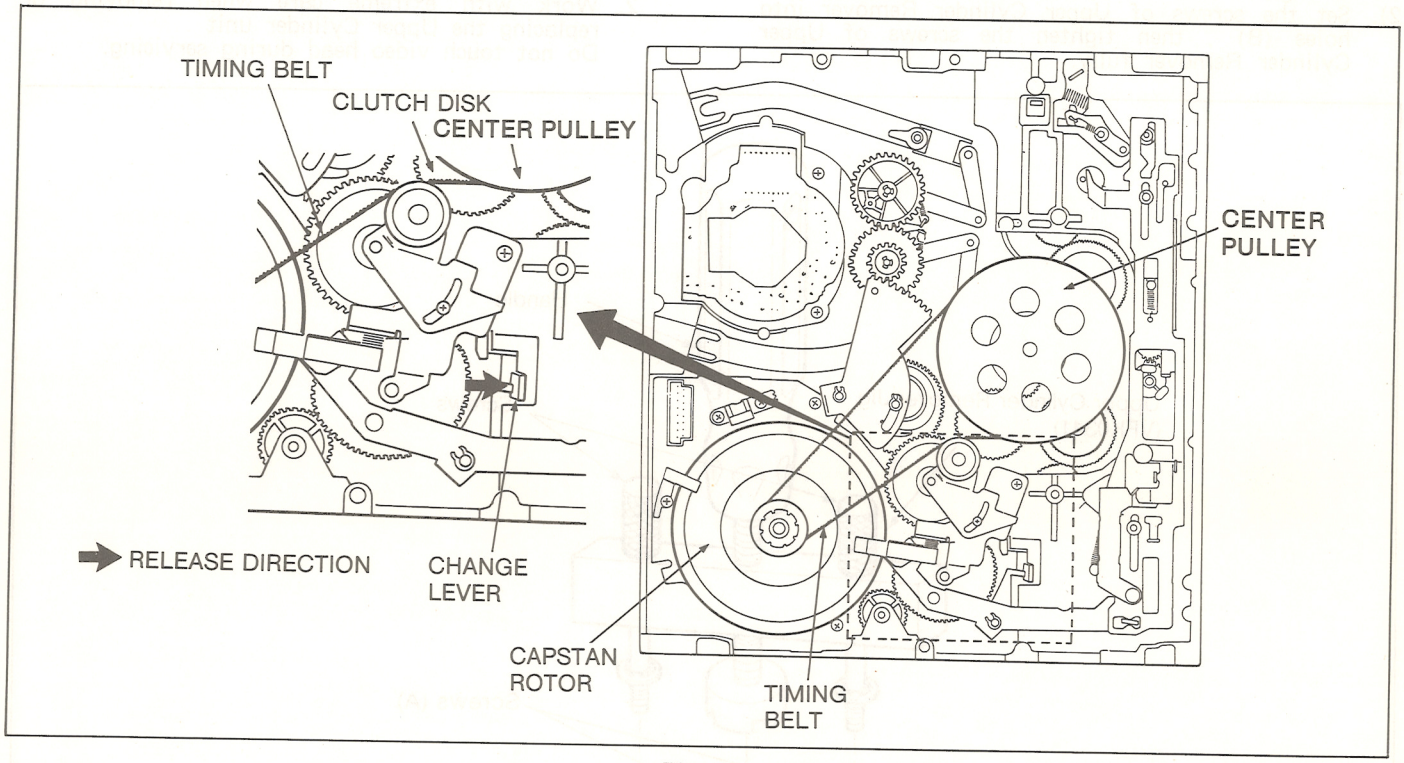

Fig. 3

4. How To Make Easier Servicing of A Packed Circuit

In case of the packed circuit such as Luminance/Chrominance , Servo , CH select and so on, you may check easily by standing Main C.B.A as shown in Fig. 4.

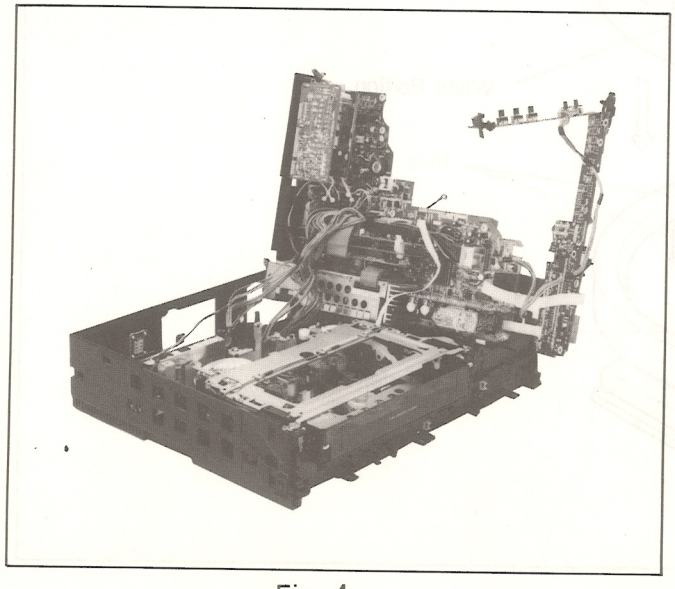

Fig. 4

5. How To Check or Replace The Timer Circuit

When checking or replacing the Timer circuit, the following steps should be followed to protect this circuit.

(1) Disconnect the AC mains.
(2) Make a short circuit at C7518 by connecting a wire to both lead wires of the C7518.
(3) Check or replace the parts.
(4) After checking or replacing the parts, remove the short circuit from C7518.

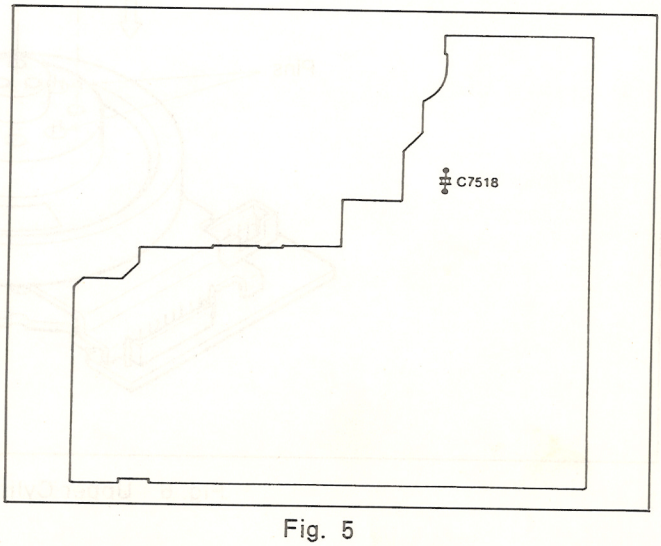

Fig. 5

6. How To Use The Upper Cylinder Remover

The newly developped Upper Cylinder Remover is useful to remove the Upper Cylinder easily ,especially when it is too hard to remove by hand.

1). Remove 2 screws (A) , then unsolder the soldered portions indicated by arrows as shown in Fig.6.
2). Set the screws of Upper Cylinder Remover into holes (B) , then tighten the screws of Upper Cylinder Remover fully.
3). Turn the handle of Upper Cylinder Remover clockwise holding the Upper Cylinder firmly until it is removed. (Upper Cylinder is lifted up gradually during turning the handle).

Note:
1. This Upper Cylinder Remover also can be used for other conventional VHS Video Head Cylinder.
2. Work with extreme care when removing or replacing the Upper Cylinder unit .
   Do not touch video head during servicing.

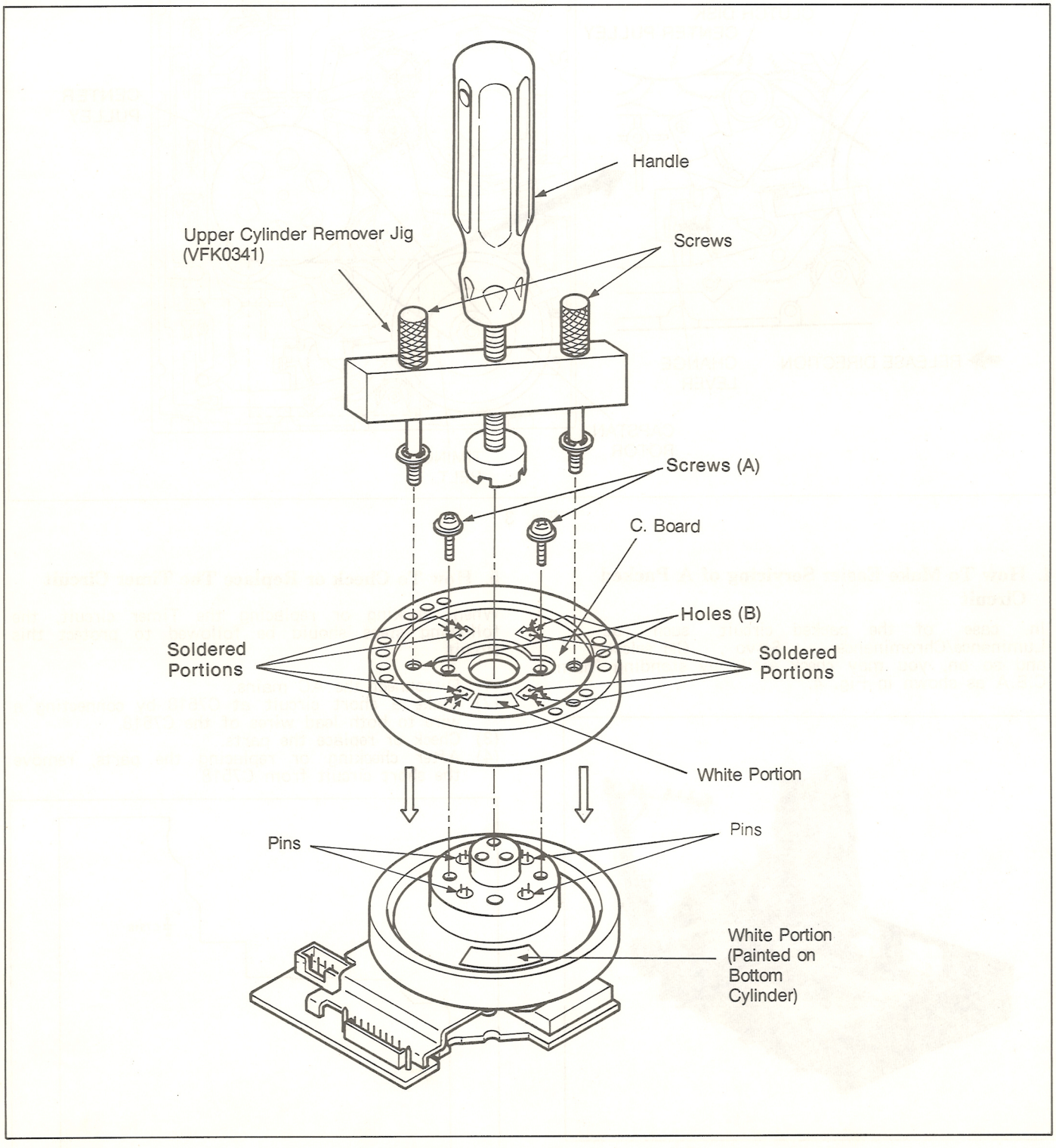

Fig. 6 Upper Cylinder Remover (VFK0341)

SECTION 1
GENERAL DESCRIPTION

1-1. FEATURES

1. 8 Hours Recording and Playback

The SLP mode with a maximum recording and playback time of 8 hours on an NV-T160 video cassette gives you triple savings in tape costs and storage space.

2. Slim Design and Front Loading System

This highly functional design allows loading the video cassette from the front, thus minimizing the space required for the placement.

3. Multi-Function Display

Whenever an operation button is pressed, the activated function is immediately indicated on this easy-to-see display. It shows you at a glance, in what operation mode the VCR is functioning.

4. Picture Sharpness Control

With this control, the contours of the playback picture can be made sharper or softer.

5. Wireless Remote Controller (Infra-red)

The Wireless Remote Controller unit allows operation of various functions from the comfort of your favourite viewing position.

6. Super Still, Super Still Advance and Double Super Fine Slow Playback (NV-G21PX/BR) or Super Fine Slow Playback (NV-G20PX/PN, NV-G19MX)

Super Still, Super Still Advance and Double Fine Slow Playback are possible with superb picture quality free from noise and jitter. (SP and SLP)
Double fine Slow Playback: NV-G21PX/BR
Super Fine Slow Playback: NV-G20PX/PN, NV-G19MX

7. Recording One Program While Watching Another

The built-in tuner allows you to record a program that you don't want to miss, while watching another program on the TV set.

8. Lap Time Indicator

The new Lap Time Counter is a great improvement over the approximate counter systems of conventional VCRs. It gives you an exact reading of the elapsed tape time in hours, minutes and seconds, and makes it easy to calculate the tape time left on a cassette.

9. Auto Operation

This VCR automatically turns itself on when a video cassette is inserted even if it was turned off. When the tab of the inserted cassette is broken out, playback will start automatically. Also, even if the VCR is off when the Eject Button is pressed, it automatically turns itself on to eject the cassette tape and it turns itself off again.
When a video cassette tape with a broken out tab is inserted and the VCR is switched over to recording, OTR or timer recording, the cassette tape will be automatically ejected.
When the tape reaches its end (except during OTR and timer recording), it will automatically rewind to the beginning.

10. 1-Month Calendar Timer

The clock/timer of the VCR is programed with the calendar up to the end of 2002, so it knows exactly what day of the week it is on any given date. Programing of as many as 8 timer recordings is possible up to one month in advance.

11. Super OTR Function (One-Touch Timer Recording)

This convenient function makes it possible to easily program the VCR for recording of TV programs with immediate start or with start within 24 hours and with the starting time and ending time precisely set to the desired minute. When the recording ends, the VCR will automatically turn itself off.

12. HQ (High Quality) Picture System

Video recorders carrying the HQ symbol mark feature the new VHS High Quality Picture System. This system assures complete compatibility with VCRs that use the conventional VHS system.

13. Auto Voltage Selector (NV-G21PX/BR, NV-G20PX/PN ONLY)

This unit is equipped with an Automatic Voltage Selector. The unit can be used where the local voltage indication is between 110–120 V or 220–240 V, without any manual voltage adjustment.
If your local voltage is between 220–240 V, use the supplied power plug adaptor (VJSS0070).

14. Function of PAL-M System (NV-G21BR ONLY)

It is possible to play back recorded tapes in the NTSC system via a PAL–M television set.
The detailed operating conditions are shown below.

OPERATION	SYSTEM	PAL-M			NTSC		
	TAPE SPEED	SP	LP	SLP	SP	LP	SLP
RECORDING		○	○	○	×	×	×
PLAYBACK		○	○	○	○	○	○
STILL		△	△	○	○	△	○
SLOW		△	△	○	○	△	○
CUE/REVIEW		△	△	○	○	△	○
×2 PLAYBACK		△	△	○	○	△	○

○ : Normal Operation
△ : Picture with color noise or no color picture
× : No Operation

1-2. CONTROLS AND COMPONENTS

FRONT
NV-G21PX

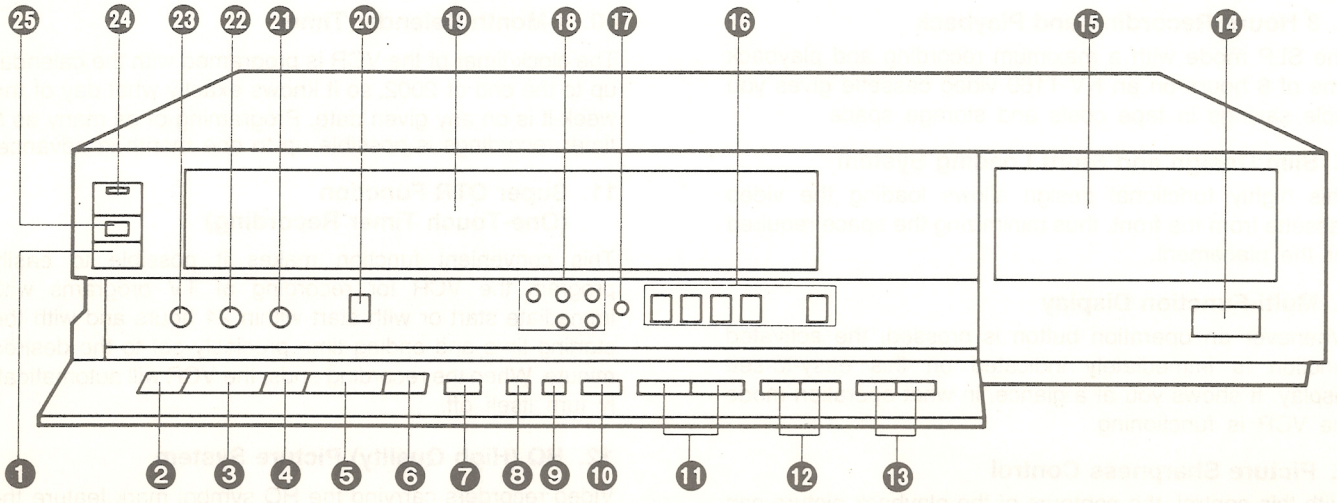

1. Eject Button (⏏)

2. Rewind ◀◀/Review ⏪ Button

Push this button to rewind the tape. When the Rewind/Review Button is kept pressed while the VTR is in the playback mode, the tape will be played back in reverse direction at about 5 times (SP mode), 9 times (LP and SLP mode) of the normal playback speed.

3. Play Button (▶)

4. Fast Forward ▶▶/Cue ⏩ Button

Push this button to wind the tape forward repidly. When the Fast Forward/Cue Button is kept pressed while the VTR is in the playback mode, the tape will be playback in forward direction at about 5 times (SP mode), 9 times (LP and SLP mode) of the normal speed.

5. Stop Button (■)

6. Pause/Still Button (❚❚)

7. Record Button (●)

8. Reset Button

9. Memory/Search Lock Button

When this button is pressed once, the Memory Indicator "M" will light up, and when it is pressed one more time, the Search Lock Indicator "S" will appear instead. When it is pressed a third time the Search Lock Indicator "S" will disappear.

10. VCR/TV Selector

11. Channel Selection Up and Down Buttons

12. OTR On Buttons

13. OTR Off Buttons

14. Remote Control Receiver Window

15. Multi-Function Display

16. Timer Controls

17. Clock Button

18. Tuner Set-up Controls

19. Cassette Compartment

20. Tape Speed Selector

For recording either of three tape speeds can be selected.
During playback the recorder selects automatically the correct speed.
Select the desired tape speed with the Tape Speed Selector before recording.
*Set to the "SP" position for normal speed.
*Set to the "LP" or "SLP" position for slow speed.
The corresponding indicator lights up during recording and playback.

21. Picture Sharpness Control

22. Slow Tracking Control

23. Tracking Control

24. Power On/Off Switch/Indicator

25. Cassette-in Indicator

NV-G21BR

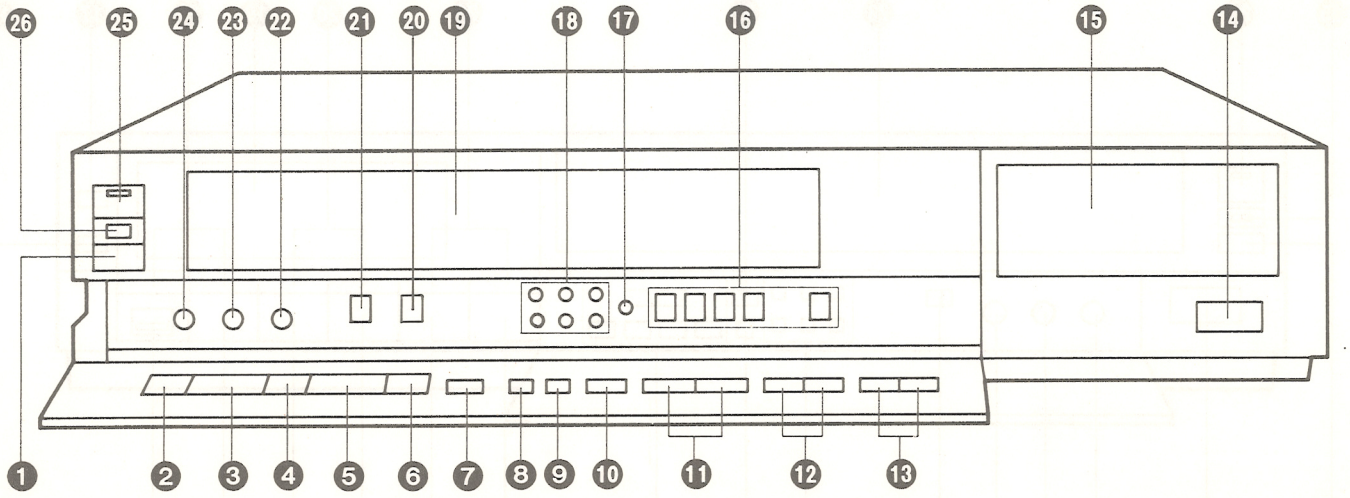

1 Eject Button (⏏)

2 Rewind ◀◀/Review ⏪ Button

Push this button to rewind the tape. When the Rewind/Review Button is kept pressed while the VTR is in the playback mode, the tape will be played back in reverse direction at about 5 times (SP mode), 9 times (LP and SLP mode) of the normal playback speed.

3 Play Button (▶)

4 Fast Forward ▶▶/Cue ⏩ Button

Push this button to wind the tape forward repidly. When the Fast Forward/Cue Button is kept pressed while the VTR is in the playback mode, the tape will be playback in forward direction at about 5 times (SP mode), 9 times (LP and SLP mode) of the normal speed.

5 Stop Button (■)

6 Pause/Still Button (❚❚)

7 Record Button (●)

8 Reset Button

9 Memory/Search Lock Button

When this button is pressed once, the Memory Indicator "M" will light up, and when it is pressed one more time, the Search Lock Indicator "S" will appear instead. When it is pressed a third time the Search Lock Indicator "S" will disappear.

10 VCR/TV Selector

11 Channel Selection Up and Down Buttons

12 OTR On Buttons

13 OTR Off Buttons

14 Remote Control Receiver Window

15 Multi-Function Display

16 Timer Controls

17 Clock Button

18 Tuner Set-up Controls

19 Cassette Compartment

20 System Selector

Set the System Selector according to the playback tape.
Automatic switching will be excuted withe setting to AUTO.

21 Tape Speed Selector

For recording either of three tape speeds can be selected.
During playback the recorder selects automatically the correct speed.
Select the desired tape speed with the Tape Speed Selector before recording.
*Set to the "SP" position for normal speed.
*Set to the "LP" or "SLP" position for slow speed.
The corresponding indicator lights up during recording and playback.

22 Picture Sharpness Control

23 Slow Tracking Control

24 Tracking Control

25 Power On/Off Switch/Indicator

26 Cassette-in Indicator

NV-G20PX/PN
NV-G19MX

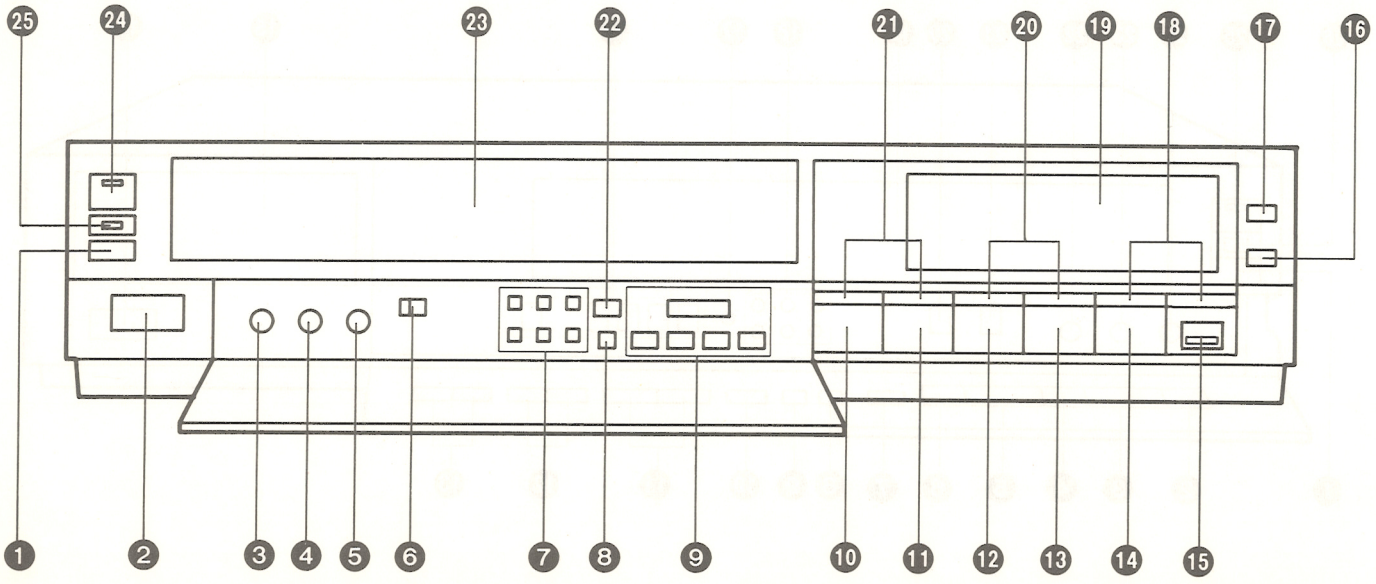

1 Eject Button (⏏)

2 Infra-red Remote Control Receiver

3 Tracking Control

4 Slow Tracking Control

5 Picture Sharpness Control

6 Tape Speed Selector

For recording either of three tape speeds can be selected.
During playback the recorder selects automatically the correct speed.
Select the desired tape speed with the Tape Speed Selector before recording.
*Set to the "SP" position for normal speed.
*Set to the "LP" or "SLP" position for slow speed.
The corresponding indicator lights up during recording and playback.

7 Tuner Set-up Controls

8 Clock Button

9 Timer Controls

10 Rewind ◀◀/Review ⏪ Button

Push this button to rewind the tape. When the Rewind/Review Button is kept pressed while the VTR is in the playback mode, the tape will be played back in reverse direction at about 5 times (SP mode), 9 times (LP and SLP mode) of the normal playback speed.

11 Play Button (▶)

12 Fast Forward ▶▶/Cue ⏩ Button

Push this button to wind the tape forward rapidly. When the Fast Forward/Cue Button is kept pressed while the VTR is in the playback mode, the tape will be playback in forward direction at about 5 times (SP mode), 9 times (LP and SLP mode) of the normal speed.

13 Stop Button (■)

14 Pause/Still Button (❚❚)

15 Record Button (●)

16 Reset Button

17 Memory/Search Lock Button

When this button is pressed once, the Memory Indicator "M" will light up, and when it is pressed one more time, the Search Lock Indicator "S" will appear instead. When it is pressed a third time the Search Lock Indicator "S" will disappear.

18 OTR Off Buttons

19 Multi-Function Display

20 OTR On Buttons

21 Channel Selection Up and Down Buttons

22 VCR/TV Selector

23 Cassette Compartment

24 Power On/Off Switch

25 Cassette-in Indicator

Multi-Function Display

NV-G21PX/BR, NV-G20PX/PN, NV-M19MX

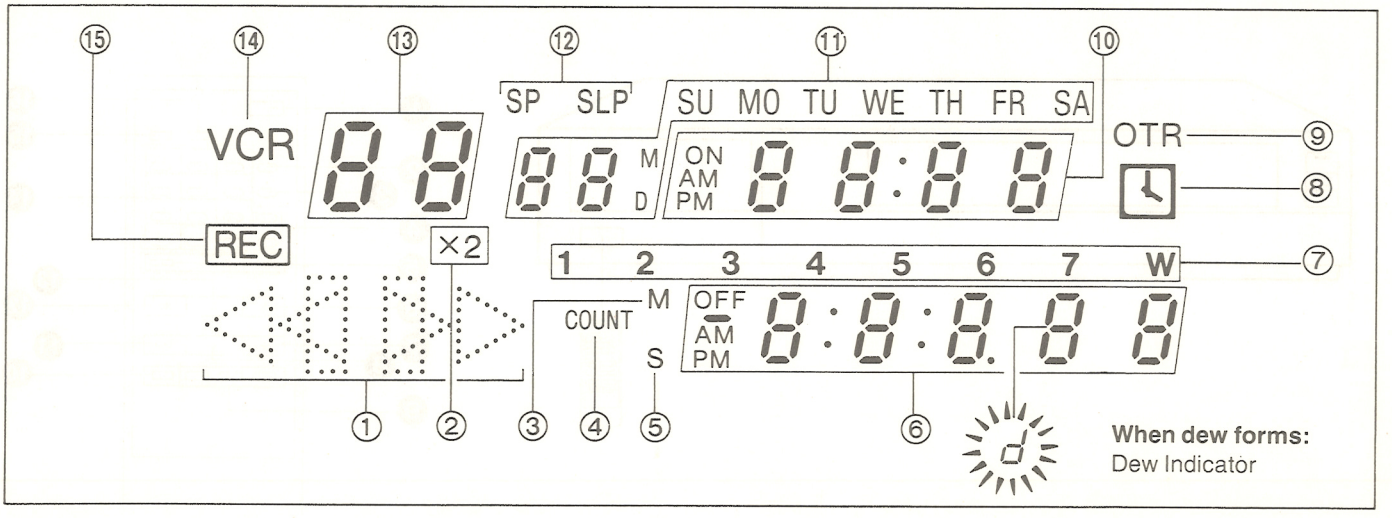

① Tape Running Display

② Double Speed Indicator (NV-G21PX/BR)

③ Memory Indicator

④ Tape Counter Indicator

⑤ Search Lock Indicator

⑥ Tape Counter Display (Lap Time Indicator)

⑦ Timer Program Number

⑧ Timer Recording Indicator

⑨ OTR Indicator

⑩ Clock Display

⑪ Date Display

⑫ Tape Speed Indicator

⑬ Channel Display

⑭ VCR Indicator

⑮ Recording Indicator

REAR

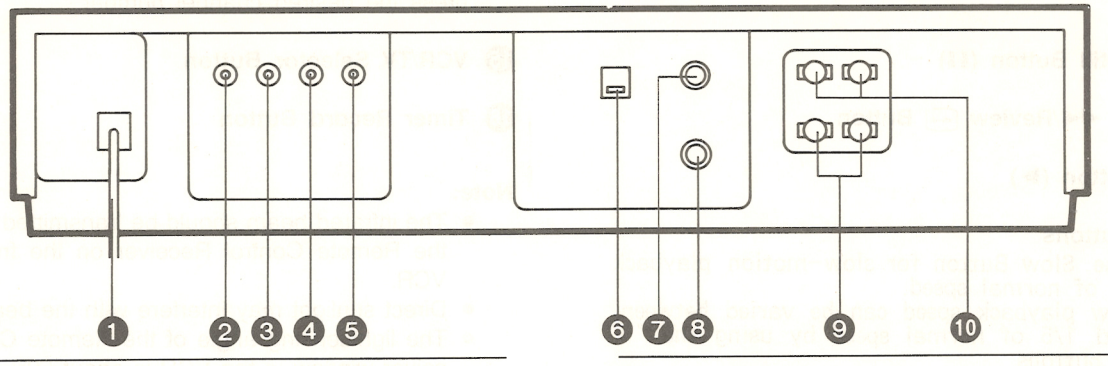

❶ AC Power Cord

❷ Audio Input Jack

❸ Video Input Jack

❹ Audio Output Jack

❺ Video Output Jack

❻ RF Converter Channel Selector

❼ VHF Antenna Output Connector (TO TV SET)

❽ VHF Antenna Input Connector (FROM ANTENNA)

❾ UHF Antenna Input Terminals (FROM ANTENNA)

❿ UHF Antenna Output Terminals (TO TV SET)

INFRA-RED REMOTE CONTROLLER
– Unit No. VEQ0535 (NV-G21PX) –

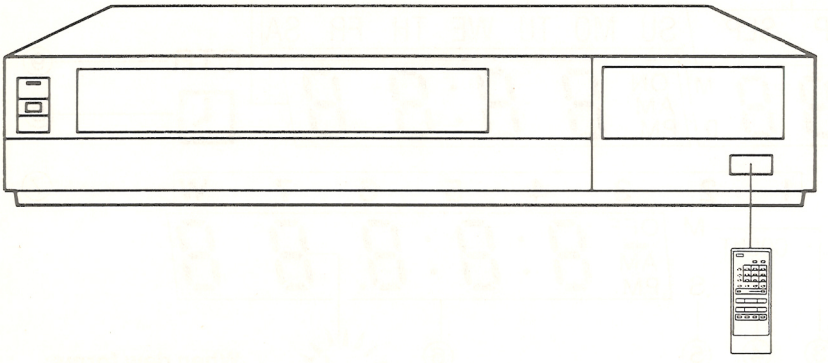

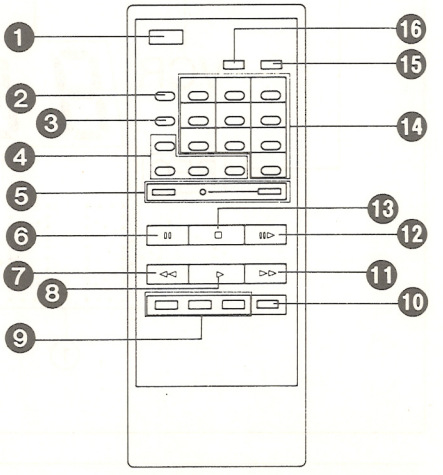

1 Power On/Off Button

2 Memory/Search Lock Button

3 Reset Button

4 Timer Recording Buttons
These buttons are used for programing timer recordings.

5 Record Buttons (●)
To start recording, press the two buttons simultaneously.

6 Pause/Still Button (❚❚)

7 Rewind ◀◀/Review ⏪ Button

8 Play Button (▶)

9 Slow Buttons
Push the Slow Button for slow-motion playback at 1/10 of normal speed.
The slow playback speed can be varied between 1/30 and 1/5 of normal speed by using the "+" and "–" buttons.

10 Double Speed Playback Button (×2)

11 Fast Forward ▶▶/Cue ⏩ Button

12 Field Advance Button (⏭)

13 Stop Button (■)

14 Channel Position Selector Buttons
Two buttons must be pressed to select a desired channel. Therefore, when selecting a channel position between 1 and 9, press the "0" Button first, and then press the desired channel number.

15 VCR/TV Selector Button

16 Timer Record Button

Note:
- The infrared beam should be transmitted directly to the Remote Control Receiver on the front of the VCR.
- Direct sunlight may interfere with the beam.
- The lightsensing angle of the Remote Control Receiver window in the VCR is about 60°.
- The unit should be used within a range of about 7 meters from the front of the VCR.

– Unit No. VEQ0565 (NV-G21BR) –

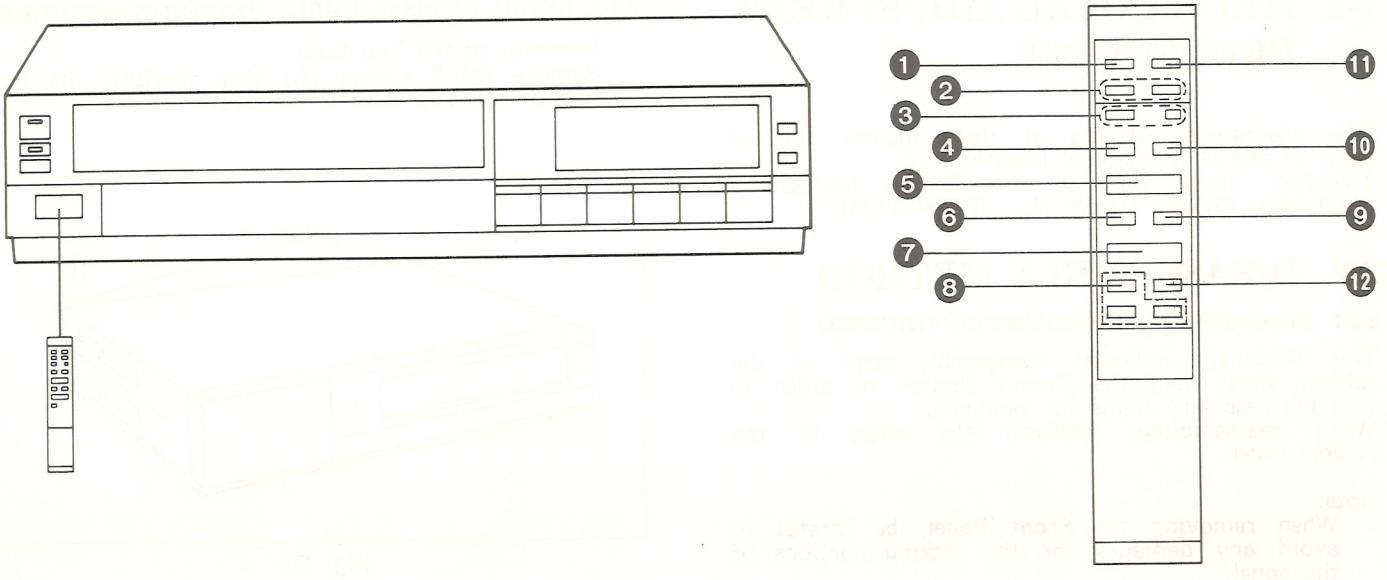

1 Power On/Off Button

2 Channel Position Selector Button

3 Record Buttons (●)
To start recording, press the two buttons simultaneously.

4 Pause/Still Button (❚❚)

5 Stop Button (■)

6 Rewind ◀◀/Review ⏪ Button
When this button is kept pressed during playback, the VCR changes over to the Review playback mode.

7 Play Button (▶)

8 Slow Button (▷)
Press the Slow Button for slow-motion playback at 1/10 of normal speed.

Note:
- The infrared beam should be transmitted directly to the Remote Control Receiver on the front of the VCR.
- Direct sunlight may interfere with the beam.
- The lightsensing angle of the Remote Control Receiver window in the VCR is about 60°.
- The unit should be used within a range of about 7 meters from the front of the VCR.

9 Fast Forward ▶▶/Cue ⏩ Button
When this button is kept pressed during playback, the VCR changes over to the Cue playback mode.

10 Still Advance Button (▷❚)

11 VCR/TV Selector

12 Double Speed Playback Button (×2) (NV-G21BR)

SECTION 2
ADJUSTMENT PROCEDURES

2-1. MECHANICAL ADJUSTMENT PROCEDURES

This Mechanical Chassis of these models are the same as the G Mechanical Chassis.
Therefore please refer to the Service Manual G Mechanical Chassis (Order No. VRD8701105).

2-2. DISASSEMBLY METHOD

2-2-1. DISASSEMBLY FLOWCHART (NV-G21PX/BR)

This flowchart indicates disassembly steps of the cabinet parts and the Circuit Boards in order to find the necessary items for servicing.
When reassembling, perform the steps in the reverse order.

Note:
When removing the Front Panel, be careful to avoid any damages for the locking portions of the panel.

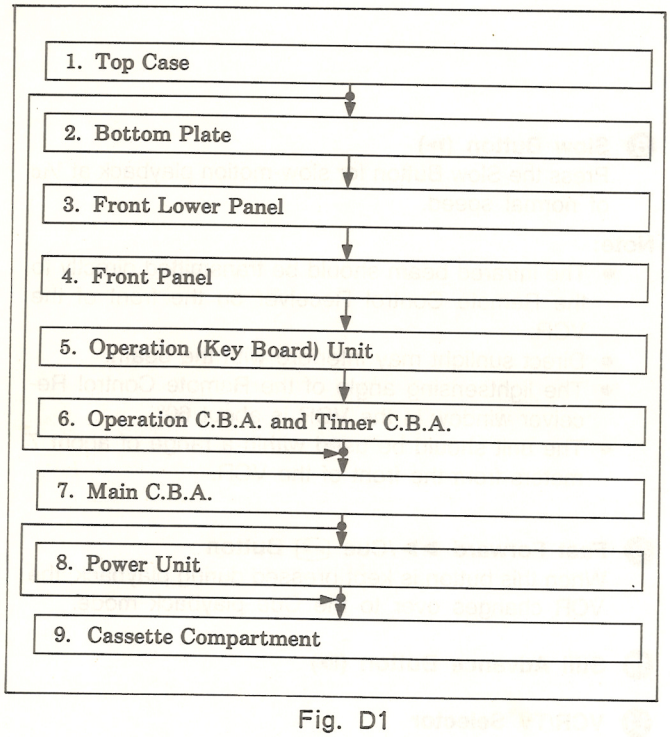

Fig. D1

2-2-2. DETAIL OF DISASSEMBLY METHOD (NV-G21PX/BR)

1. Removal of the Top Case
Remove the 2 screws (A) then carefully lift the rear of the Top Case to remove.

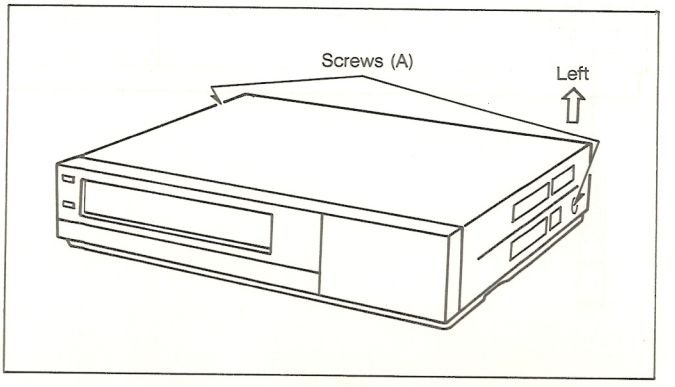

Fig. D2

2. Removal of the Bottom Plate
Place the deck upside down so that the bottom side faces upward.
Then remove the 4 screws (B).

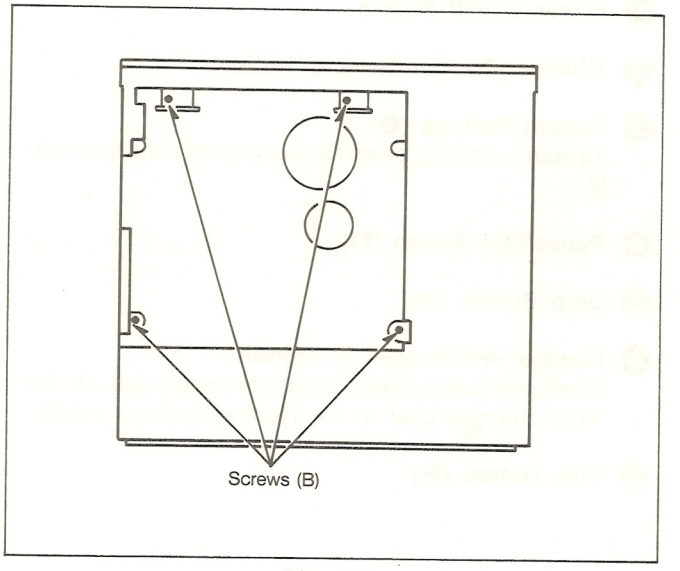

Fig. D3

Note:
Place the cushion under the deck to avoid any damages.

3. Removal of the Front Lower Panel.
Place the deck up side down so that the bottom side faces upward.
Then remove the 1 screw (C) and unlock the 3 locking portions (D).

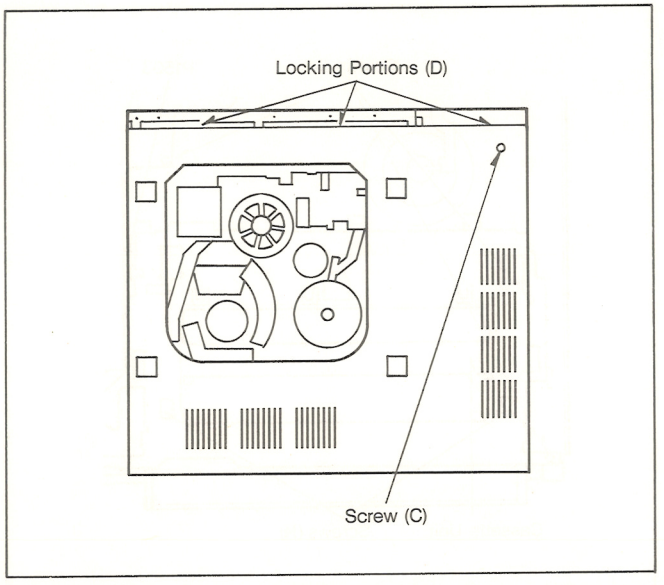

Fig. D4

Note:
Place the cushion under the deck to avoid any damages.

4. Removal of the Front Panel
Open the Operation (key Board) Unit and remove the 1 screw (E) and unlock the 5 locking portions (F).
Then hold the top portion of the panel and turn it toward the front side of the deck to remove.

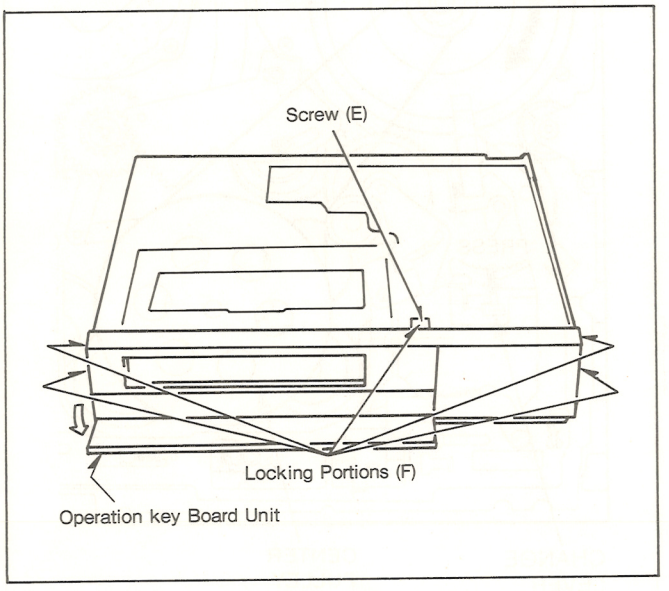

Fig. D5

5. Removal of the Operation (key Board) Unit
Remove the 2 screws (G) and unlock the 2 locking portions (H).
Unlock the connector P7502 and remove the flexible wire.
Then carefully remove the Operation (key Board) Unit.

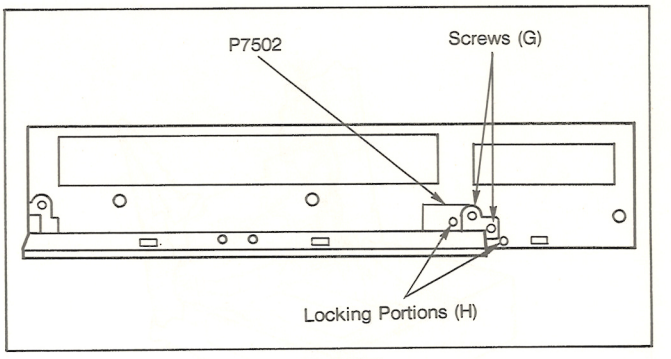

Fig. D6

6. Removal of the Operation C.B.A. and Timer C.B.A.
Remove the 7 screws (I) and unlock the 3 locking portions (J).

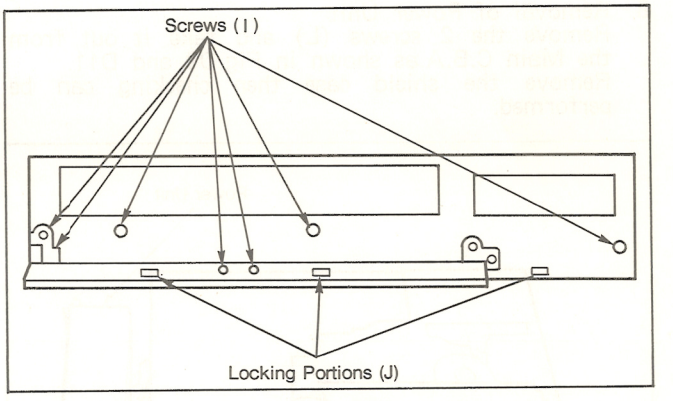

Fig. D7

7. Removal of the Main C.B.A.
Remove the 9 screws (K) and take out the Main C.B.A. Putting it up right position on the flame can be available as shown in Fig.D10.

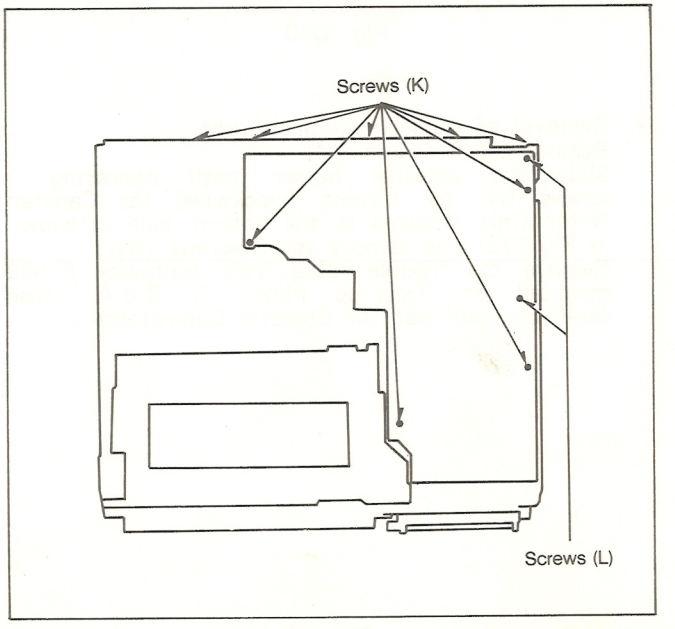

Fig. D8

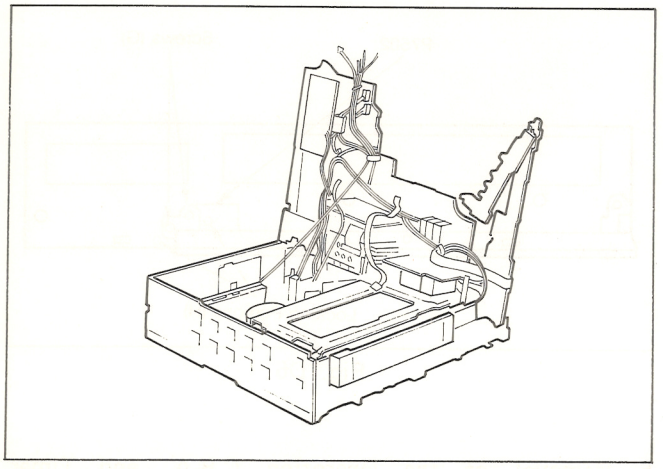

Fig. D9

8. Removal of Power Unit
Remove the 2 screws (L) and take it out from the Main C.B.A.as shown in Fig.D9 and D11.
Remove the shield case then checking can be performed.

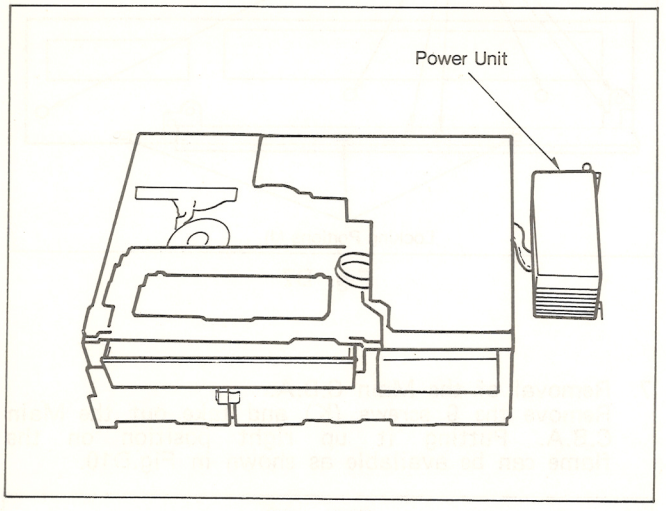

Fig. D10

9. Removal of Cassette Compartment
Remove the 3 screws (M).
Slide the cassette holder until appearing 2 screws (N) by turning (clockwise) the Capstan Rotor Unit (located in the bottom side as shown in Fig.D12) and remove the 2 screws (N).
Remove the flexible cable from connector P1503 mounted on Take-up Photo Tr C.B.A. ,then carefully pull out the Cassette Compartment.

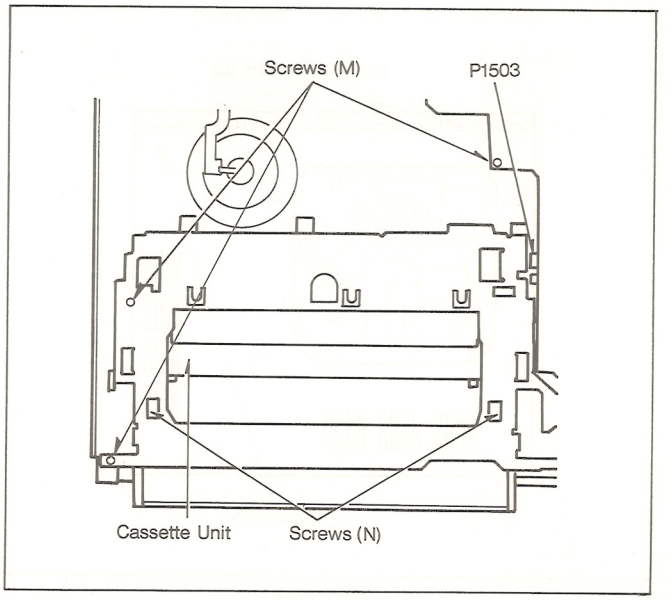

Fig. D11

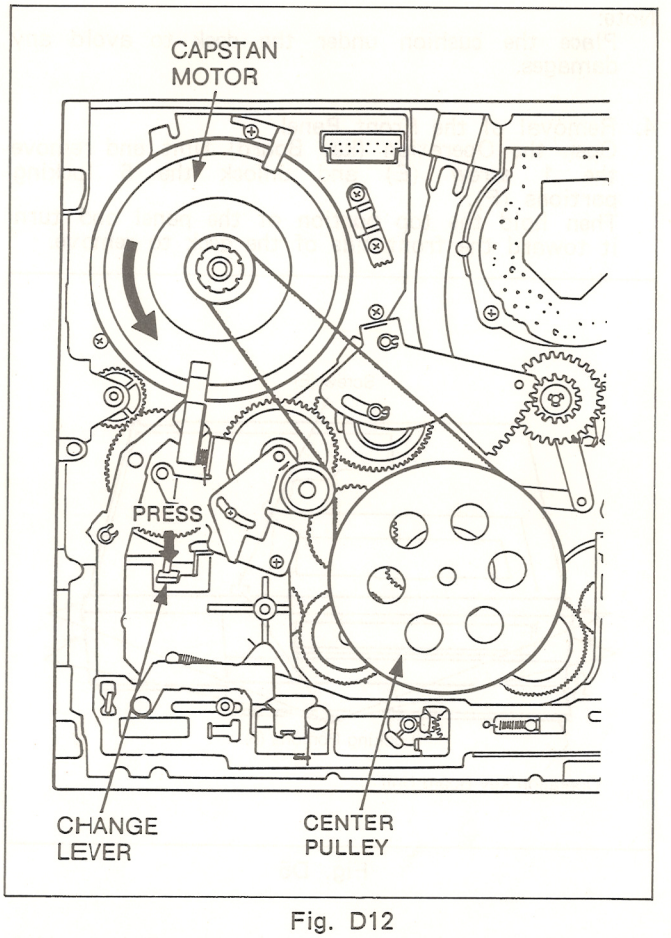

Fig. D12

Note1:
When reinstalling the Cassette Compartment, mechanical adjustment (alignment) must be performed for correct working , refer to Service Manual (G Mechanical chassis) (order No. VRD8701105, item 3-10 Reinstallation of Cassette Compartment for mechanical adjustment (alignment).

2-2-3. DISASSEMBLY FLOWCHART (NV-G20PX/PN, NV-G19MX)

This flowchart indicates desassembly steps of the cabinet parts and the Circuit Boards in order to find the necessary items for servicing.
When reassembling, perform the steps in the reverse order.

Note:
When removing the Front Panel, be careful to avoid any damages for the locking portions of the panel.

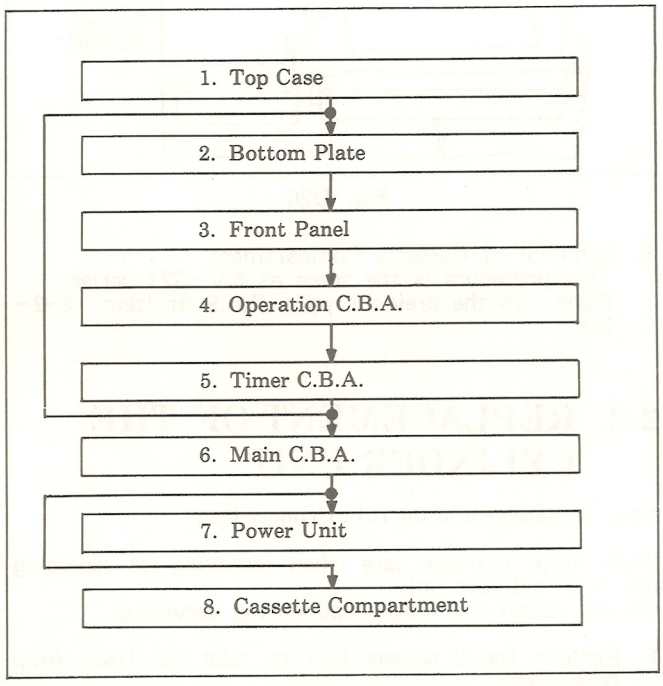

Fig. D13

2-2-4. DETAIL OF DISASSEMBLY METHOD (NV-G20PX/PN, NV-G19MX)

1. Removal of the Top Case
Remove the 4 screws (A), then carefully lift the rear of the Top Case to remove.

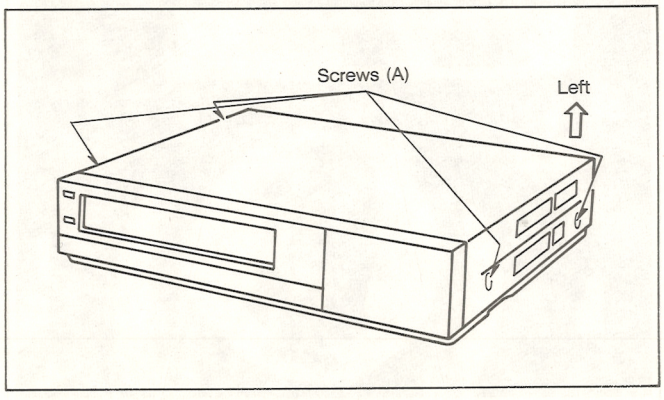

Fig. D14

2. Removal of the Bottom Plate
Place the deck up side down so that the bottom side faces upward.
Then remove the 5 screws (B).

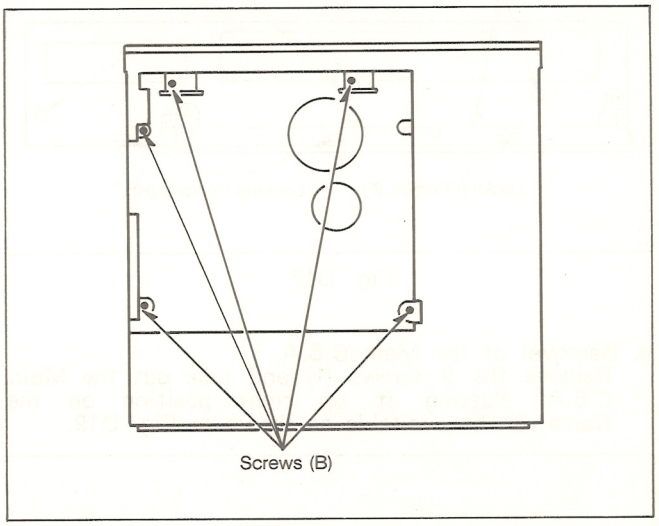

Fig. D15

Note:
Place the cushion under the deck to avoid any damages.

3. Removal of the Front Panel
Remove the 4 screws (C) and unlock the 6 locking portions (D).
Then hold the top portion of the panel and turn it toward the front side of the deck to remove.

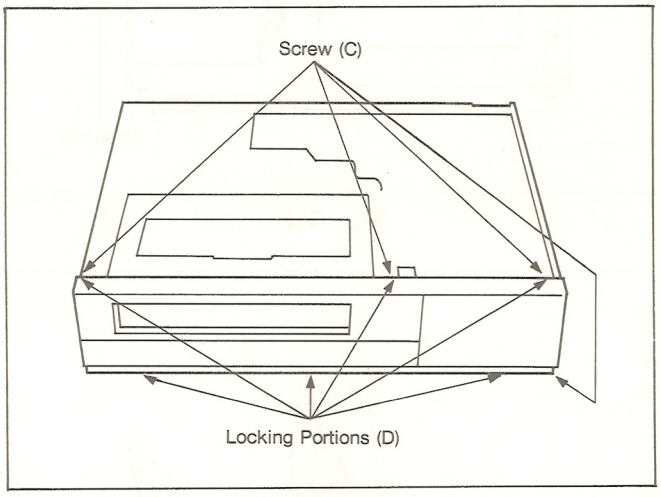

Fig. D16

4. Removal of the Operation C.B.A.
Remove the 2 screw (E) and unlock the 1 locking portion (F).
5. Removal of the Timer C.B.A.
Remove the 2 screws (G) and unlock the 2 locking portions (H).

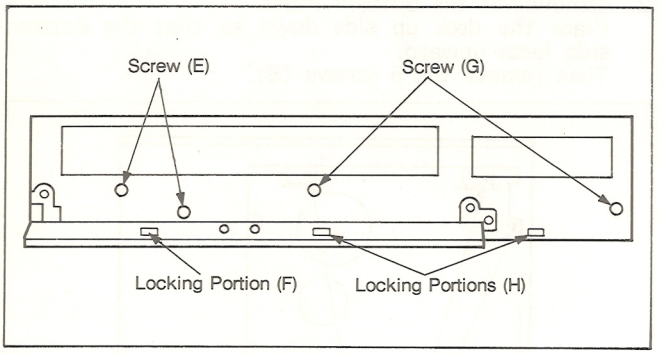

Fig. D17

6. Removal of the Main C.B.A.
   Remove the 9 screws (I) and take out the Main C.B.A. Putting it up right position on the flame can be available as shown in Fig. D19.

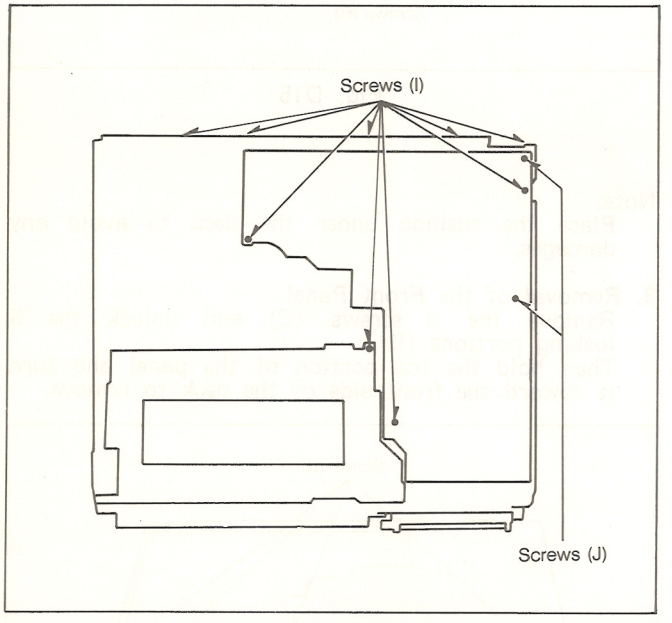

Fig. D18

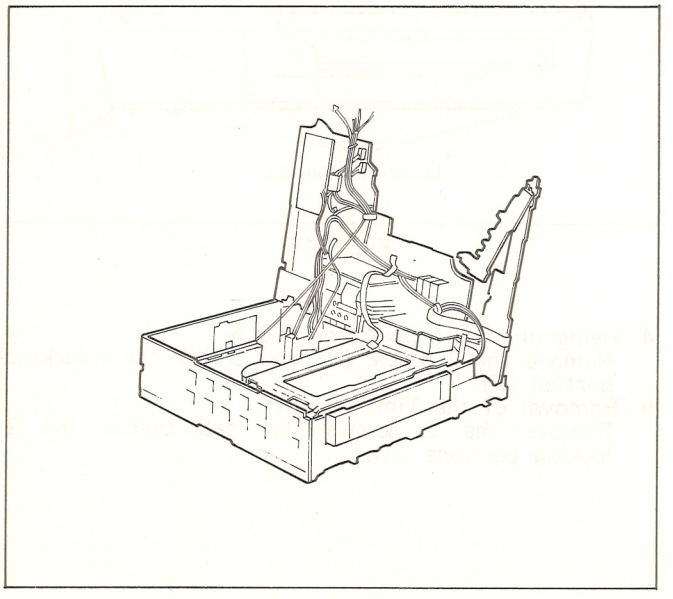

Fig. D19

7. Removal of Power Unit
   Remove the 2 screws (J) and take it out from the Main C.B.A. as shown in Fig. D18 and D20. Remove the shield case then checking can be performed.

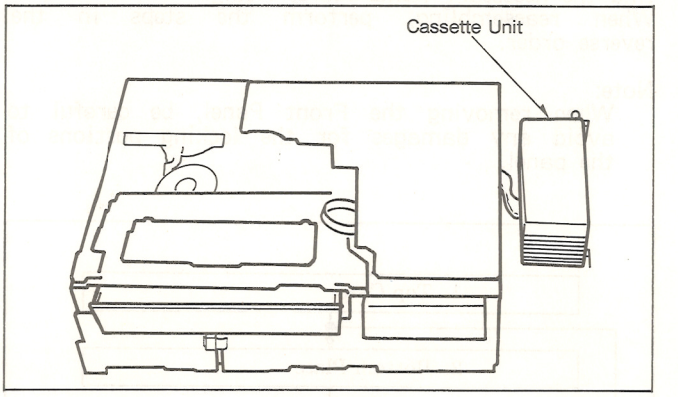

Fig. D20

8. Removal of Cassette Compartment
   This procedure is the same as NV-G21 series. Refer to the previous page (No.9 of Item 2-2-2.)

2-3. REPLACEMENT OF THE CYLINDER UNIT

2-3-1. Replacement of the D.D. Cylinder Unit

Work with extreme care when removing or replacing the D.D. cylinder unit.
Do not touch the video head during servicing.

1. Remove the 2 screws (M) to take the Head Amp pack Out.
2. Remove the 1 screw (N) to take the Earth Holder Unit Out.
3. Disconnect the 5P connector on the cylinder drive C.B.A.

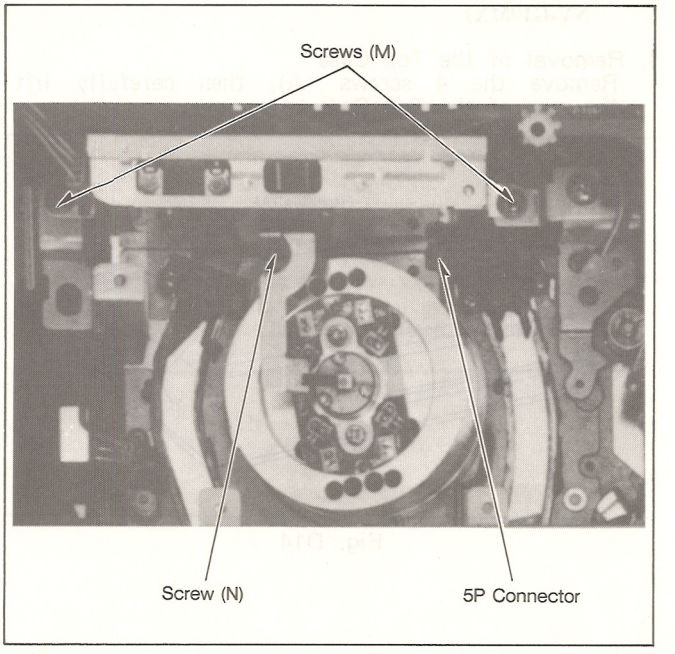

Fig. D21

4. Remove the 3 screws (O) to take the D.D. cylinder unit (with the cylinder drive C.B.A.) out.

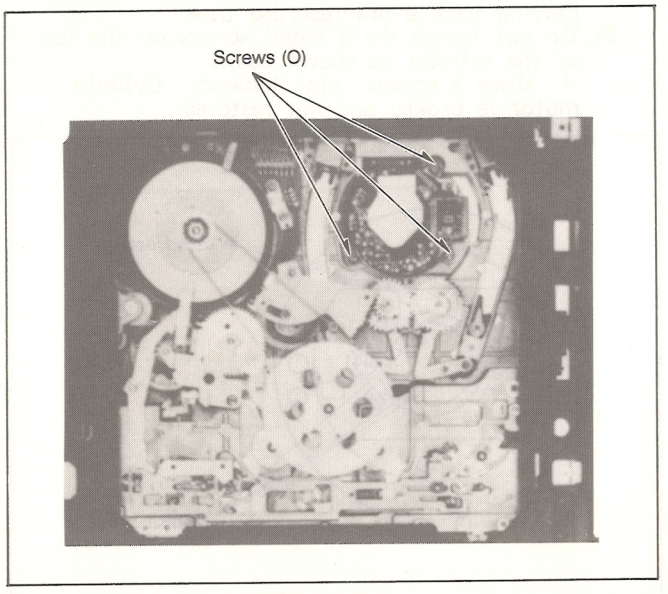

Fig. D22

Note:
Since there is very little clearance between the D.D. cylinder unit and the chassis, remove the D.D. cylinder unit gently and carefully.

5. Reinstall the new D.D.Cylinder Unit, tighten the 3 screws (O) and reinstall the Earth Holder Unit, tighten the 1 screw (N).
Then re-connect the Head Amp pack and 5P connector and tighten 2 screws (M).

Note:
(1) Gently rub the video head in direction of tape travel with Head cleaning stick.
(2) After replacement, confirm the performance. If any further maintenance is required, perform "TAPE INTER-CHANGE ABILITY ADJUSTMENT".

2-3-2. Replacement of the Cylinder Drive C.B.A.

1. Remove the D.D. cylinder unit referring the Item 2-3-1.
2. Place the D.D. cylinder unit upside down.
3. Unsolder the soldered portion (P) for shield case to take it out.
4. Unsolder the 14 soldered portions (Q) indicated by an arrow mark (including 6 soldered portions inside of shield case).
5. Remove the 2 screws (R) to remove the cylinder drive C.B.A. unit.

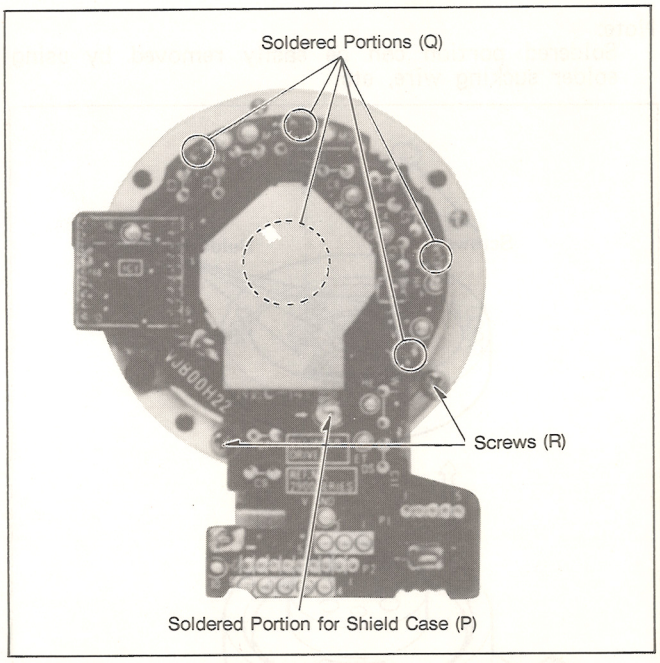

Fig. D23

6. Reinstalling is just reverse way of above procedures.

2-3-3. Replacement of the Cylinder Drive IC

1. Remove the Cylinder Drive C.B.A. as item 2-3-2.
2. Remove the screw (S) to take the heat sink plate out.
3. Unsolder the 18 soldered portions of the Cylinder Drive IC to take it out.
4. Reinstall the New IC with the care of Pins location.
5. Re-solder the 18 pins of the Cylinder Drive IC.
6. Reinstall the Cylinder Drive C.B.A. to the D.D. Cylinder Unit.

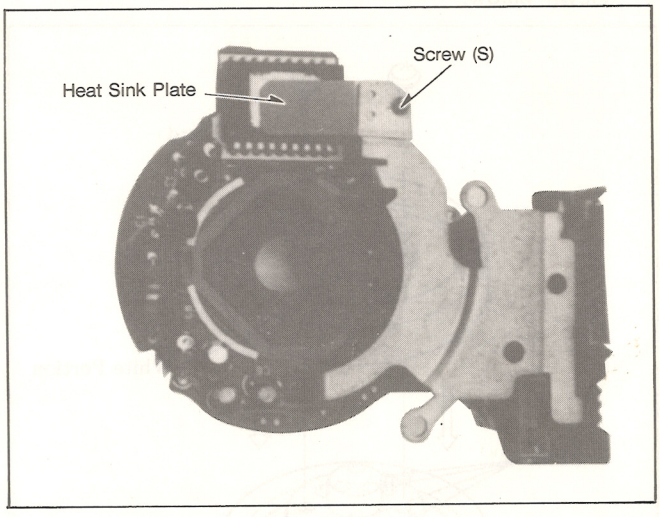

Fig. D24

2-3-4. Replacement of the Upper Cylinder Unit

1. Remove two screws as shown below.
2. Unsolder 8 soldered portions indicated by arrows on the C. Board.
3. Remove the Upper Cylinder Unit by lifting it upward.

Note:
Soldered portion can be easily removed by using solder sucking wire, etc.

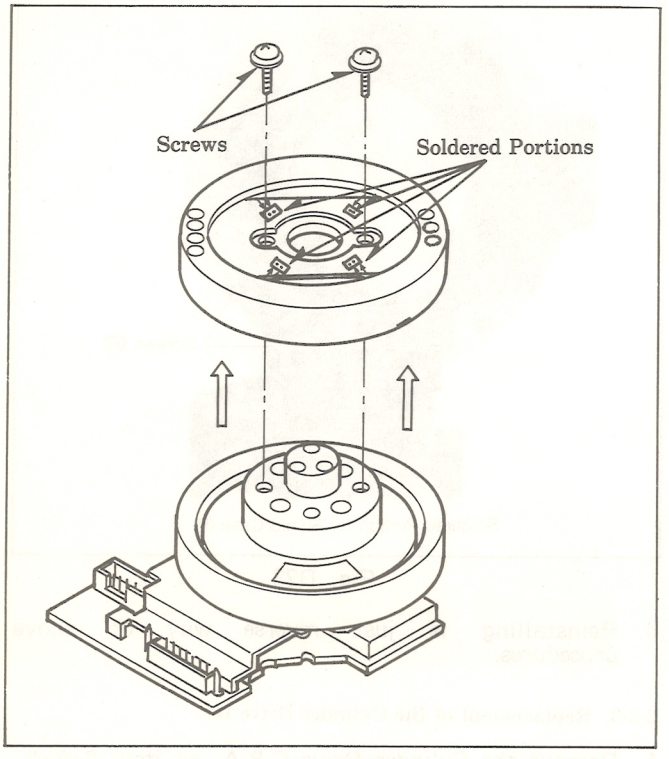

Fig. D25

4. The upper cylinder unit can be reinstalled by reversing the removal procedure, however, when the upper cylinder is reinstalling, be extremely carefull so that white portion of C. Board of the upper cylinder correctly matches the white portion of the bottom cylinder as shown below.

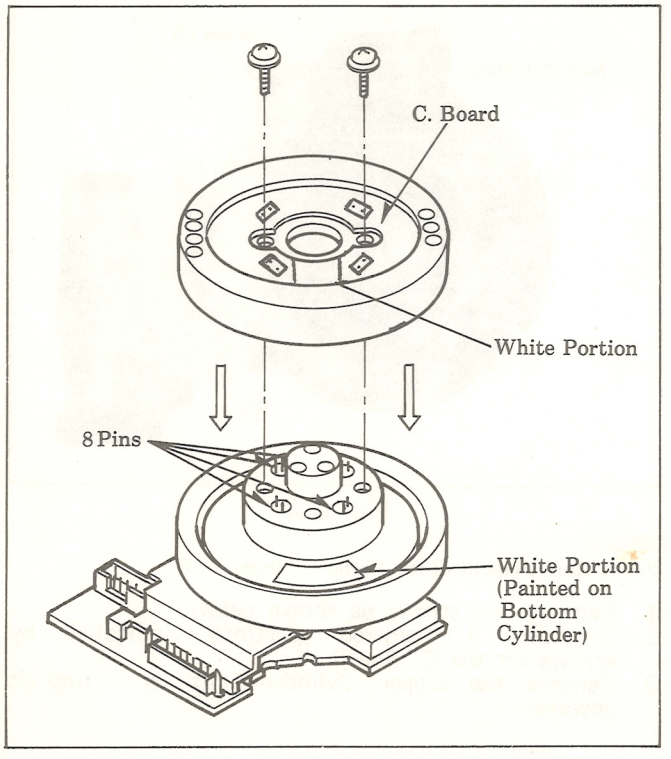

Fig. D26

Note:
1). If the Upper Cylinder Unit is reversely installed, no colour would appear when playing back a pre-recorded tape.
2). Do not loosen the 3 small screws on the top of the cylinder as shown below .
If these 3 screws are loosend, Cylinder motor is broken and not restored.

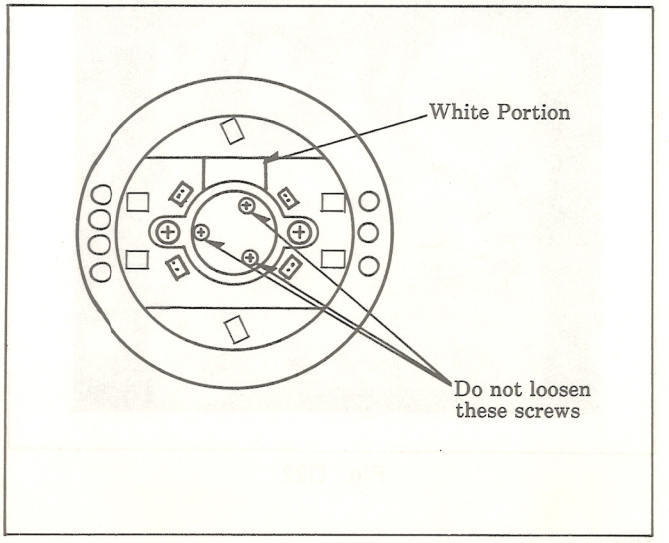

Fig. D27

2-4. ELECTRICAL ADJUSTMENT PROCEDURES

This section provides complete electrical adjustment procedures which may be required for electronic circuits of VHS video Cassette Recorders.

2-4-1. TEST EQUIPMENTS

To perform the electrical adjustments completely, following equipments are required.

1. VTVM (Vacuum Tube Volt Meter) or DVM (Digital Volt Meter)
   Voltage Range: 0.001~50V
2. Dual-Trace Oscilloscope
   Voltage range: 0.005~50V/div.
   Frequency Range: DC~30MHz
   Probes: 10:1
3. Frequency counter
   Frequency Range: 0~10MHz
4. Signal Generator (Sinewave)
   Frequency Range: 0~500KHz
5. Video Sweep Generator
   Frequency Range: 0~10MHz
6. Colour Monitor TV
7. Plaastic Tip Driver
8. VHS Alignment Tape (VFM8080HMFP)
9. Pattern Generator

2-4-2. HOW TO READ THE ADJUSTMENT PROCEDURES

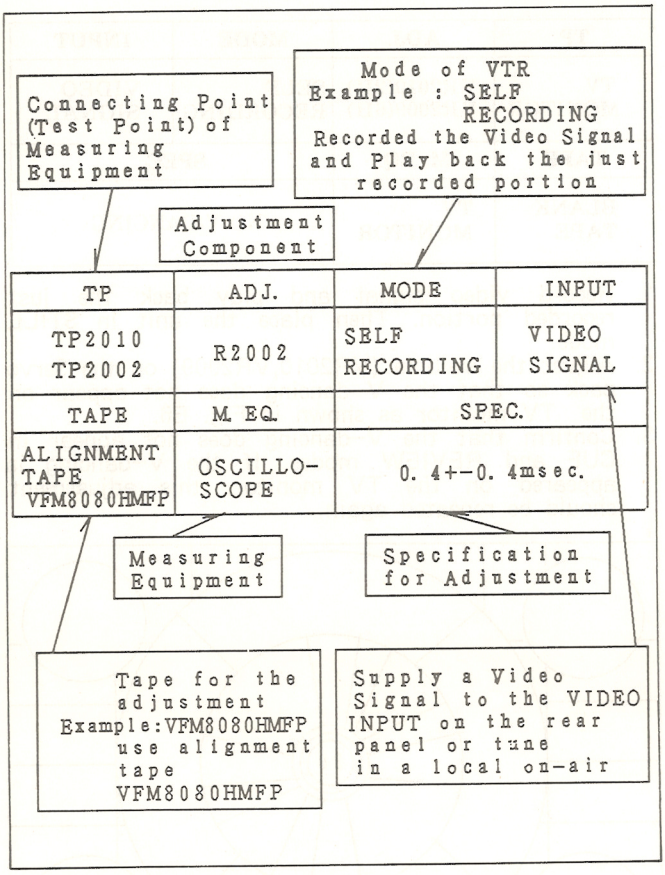

Fig. E1

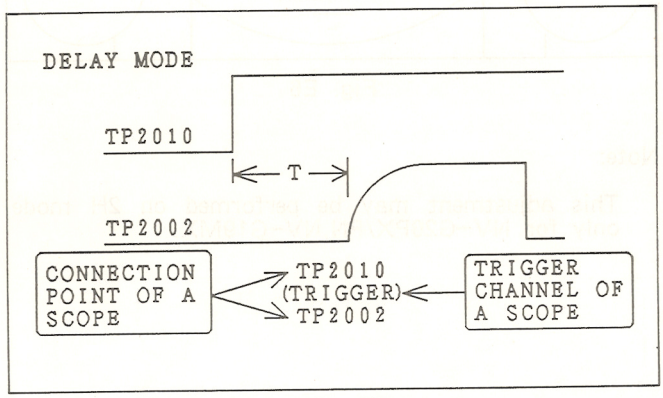

Fig. E2

Note1:
Since different models, such as NV-G21PX/BR, NV-G20PX/PN, NV-G19MX are combined into one procedure, pay attention not to adjust different specifications.

Note2:
Before the electrical adjustment, set the VHS VTR as following conditions except for especial instructions in each adjustment item.

1) Tracking Control VR --- Center FIX Position
2) Picture Sharpness VR --- Center FIX Position
3) TAPE SPEED SELECT --- SP
4) SYSTEM SELECT --- M-P AL (NV-G21BR)
5) Timer Record Button --- OFF
6) Oscilloscope-Probe --- 10:1 Probe

SERVO SECTION

2-4-3. PG SHIFTER ADJUSTMENT

TP	ADJ.	MODE	INPUT
TP2001 TP3002	VR2001	PLAY	
TAPE	M. EQ.	SPEC.	
ALIGNMENT TAPE VFM8080HMFP	OSCILLO-SCOPE	6.5±0.5H	

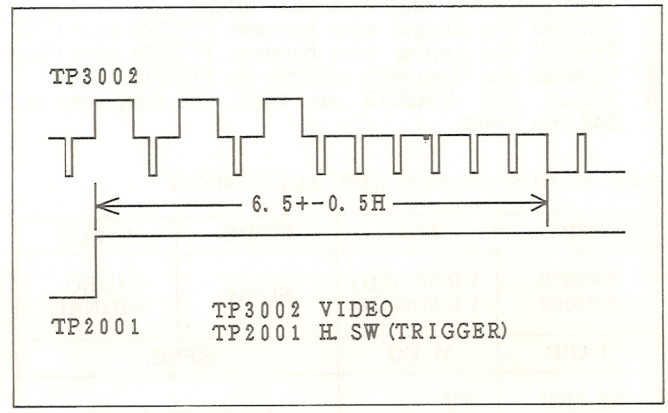

Fig. E3

2-4-4. TRACKING FIX ADJUSTMENT

TP	ADJ.	MODE	INPUT
TP2001 TP2002	VR2002	SELF RECORDING	VIDEO SIGNAL
TAPE	M. EQ.	SPEC.	
BLANK TAPE	OSCILLO-SCOPE	T=0±0.4msec.(NV-G21PX) T=0±0.2msec.(NV-G21BR) T=0.4±0.4(NV-G20PX/PN, NV-G19MX)	

1. Set the TRACKING VR to the center fix position.
2. Record video signal, then play back the just recorded portion.
3. Adjust VR2002 so that the period of "T" becomes within specification.

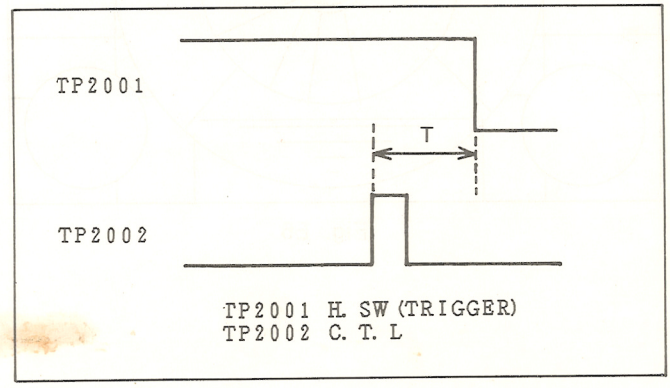

Fig. E4

2-4-5. SLOW FREERUN ADJUSTMENT

TP	ADJ.	MODE	INPUT
TP2015	VR2013	STILL	VIDEO SIGNAL
TAPE	M. EQ.	SPEC.	
BLANK TAPE	FREQUENCY COUNTER	648±10Hz	

1. Record video signal and play back the tape just recorded.
   Then place the unit in STILL mode.
2. Connect the jumper wire between TP2025 and GND.
3. Connect the jumper wire between TP2026 and GND.
4. Connect the frequency counter to TP2015.
5. Adjust the VR2013 so that the frequency is 648 +– 10Hz.

2-4-6. 2H/4H SLOW TRACKING ADJUSTMENT

TP	ADJ.	MODE	INPUT
TP2020 TP2002	VR2011(2H) VR2006(4H)	SLOW	VIDEO SIGNAL
TAPE	M. EQ.	SPEC.	
BLANK TAPE	TV MONITOR	NO NOISE BAND	

1. Set the SLOW TRACKING VR to center fix position.
2. Record video signal and play back the just recorded portion. Then place the unit in SLOW mode.
3. Adjust the volume (VR2011, VR2006) so that the noise band does not appear in the slow playback picture on TV monitor.

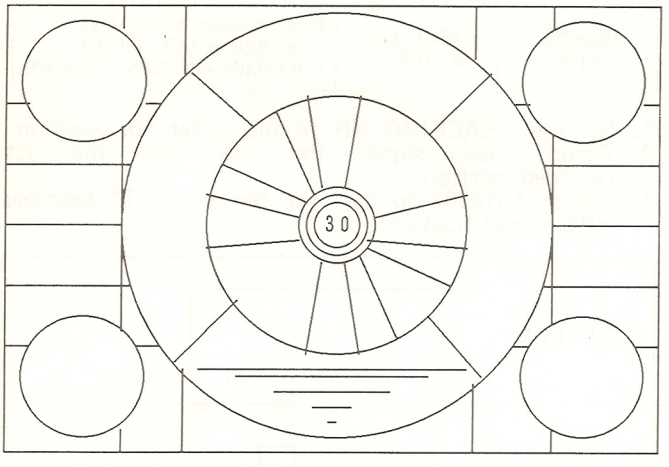

Fig. E5

2-4-7. ARTIFICIAL V-SYNC ADJUSTMENT

TP	ADJ.	MODE	INPUT
TV MONITOR	VR2010(2H) VR2009(6H)	SELF RECORDING	VIDEO SIGNAL
TAPE	M. EQ.	SPEC.	
BLANK TAPE	TV MONITOR	NO V-DANCING	

1. Record video signal and play back the just recorded portion. Then place the unit in STILL mode.
2. Adjust the volume (VR2010,VR2009) on the Servo pack so that the V–dancing does not appear on the TV monitor as shown in Fig. E6.
3. Confirm that the V–dancing does not appear in CUE and REVIEW modes. If the V–dancing is appeared on the TV monitor, this adjustment should be repeated again.

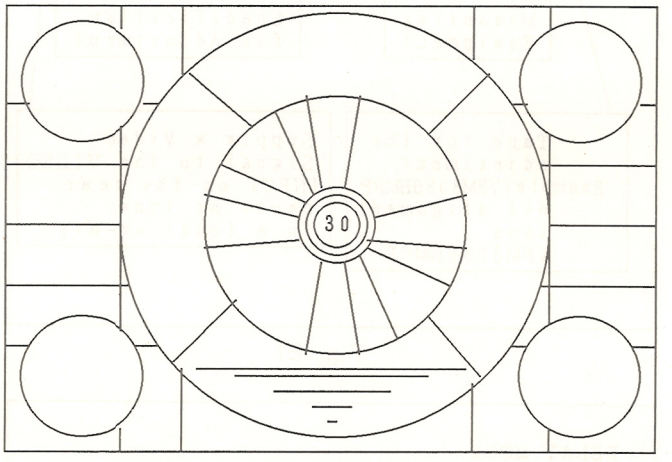

Fig. E6

Note:

This adjustment may be performed on 2H mode only for NV–G20PX/PN,NV–G19MX.

LUMINANCE, CHROMINANCE & HEAD AMP SECTION

2-4-8. CHROMINANCE & LUMINANCE RECORDING CURRENT ADJUSTMENT

* CHROMINANCE RECORDING CURRENT ADJ.

TP	ADJ.	MODE	INPUT
TP503 (HOT) TP504 (GND)	VR502	RECORDING	VIDEO SIGNAL (COLOUR BAR)
TAPE	M. EQ.	SPEC.	
BLANK TAPE	OSCILLO-SCOPE	44±5mVp-p	

* LUMINANCE RECORDING CURRENT ADJ.

TP	ADJ.	MODE	INPUT
TP503 (HOT) TP504 (GND)	VR501	RECORDING	VIDEO SIGNAL (COLOUR BAR)
TAPE	M. EQ.	SPEC.	
BLANK TAPE	OSCILLO-SCOPE	120±5mVp-p	

1. Connect the oscilloscope to TP503 (HOT) and TP504 (GND). Then place the unit in RECORDING mode.
2. Set the VR501 to minimum position, so that luminance recording current signal must be closed to observe the chrominance recording current signal.
3. Adjust VR502 so that the chrominance recording current level is 44 +− 5mVp−p as shown in Fig. E7.

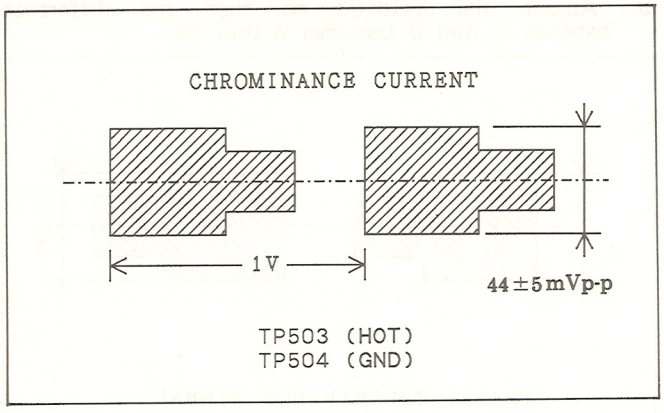

Fig. E7

4. Adjust VR501 so that the luminance recording current level 120 +− 5mVp−p.

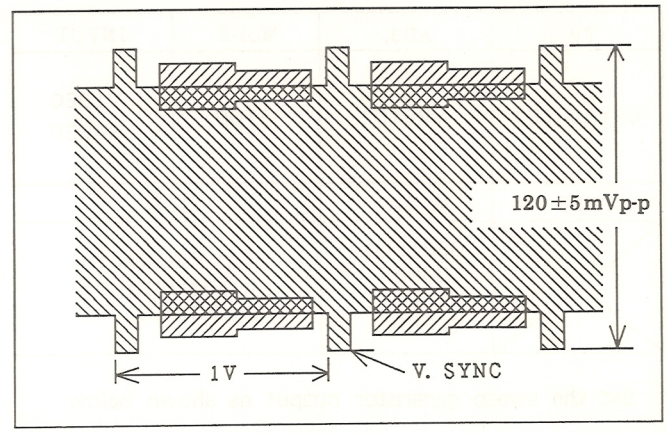

Fig. E8

2-4-9. VIDEO LEVEL ADJUSTMENT

TP	ADJ.	MODE	INPUT
VIDEO OUT (TP3002)	VR301	RECORDING	VIDEO SIGNAL (COLOUR BAR)
TAPE	M. EQ.	SPEC.	
BLANK TAPE	OSCILLO-SCOPE	Y=1.0±0.1Vp-p	

1. Record colour bar signal then play back the just recorded portion.
2. Adjust VR301 for 1.0 +−0.1 Vp−p as shown in Fig. E11.

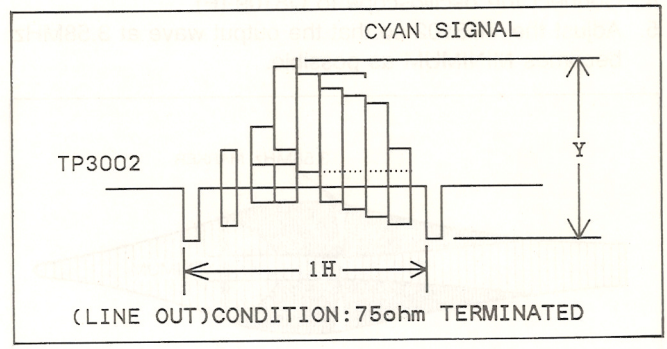

Fig. E9

2-4-10. NTSC COMB FILTER ADJUSTMENT (NV-G21BR)

TP	ADJ.	MODE	INPUT
Q8109-(E)	VR8102	STOP	VIDEO SWEEP
TAPE	M. EQ	SPEC.	
	OSCILLO-SCOPE/ VIDEO SWEEP	WAVEFORM IS MINIMIZED AS POSSIBLE	

1. Set the sweep generator output as shown below.

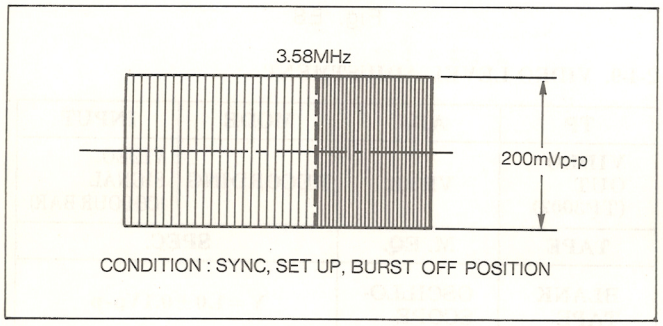

Fig.2-64

2. Set the SYSTEM SELECT SW of the deck to NTSC mode.
3. Supply the video sweep signal to Q8101-(B).
4. Connect the oscilloscope to Q8109-(E).
5. Adjust the VR8102 so that the output wave at 3.58MHz becomes MINIMUM as possible.

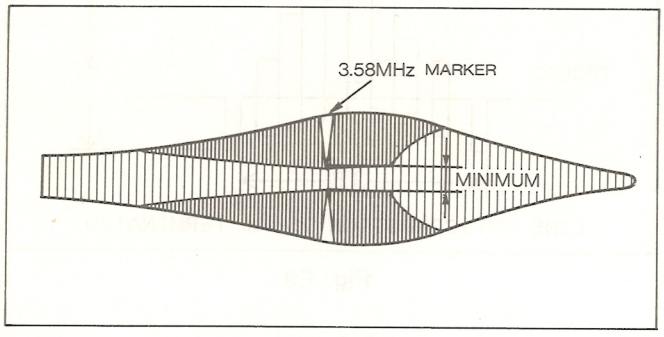

Fig.2-65

2-4-11. PAL (M) PLAYBACK GAIN ADJUSTMENT (NV-G21BR)

TP	ADJ.	MODE	INPUT
TP8101	VR8101	SELF RECORDING (SP MODE)	PAL(M)VIDEO SIGNAL
TAPE	M. EQ	SPEC.	
BLANK TAPE	OSCILLO-SCOPE	390+-20mVp-p	

1. Set the SYSTEM SELECT SW of the deck to the M-PAL mode.
2. Playback the just recorded portion in SP mode.
3. Connect the oscilloscope to TP8101.
4. Adjust the VR8101 so that the level becomes 390+-20mV-p-p.

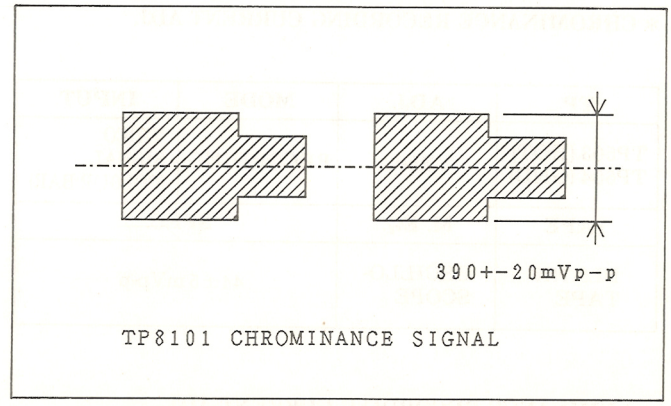

Fig. E10

2-4-12. FRAME MUTUAL RELATION ADJUSTMENT (NV-G21 BR ONLY)

TP	ADJ.	MODE	INPUT
TP8101	VR8103	SELF RECORDING (SLP MODE)	PAL(M) VIDEO SIGNAL
TAPE	M. EQ	SPEC.	
BLANK TAPE	OSCILLO-SCOPE	A:B=+-5%	

1. Set the SYSTEM SELECT SW of the deck to the M-PAL mode.
2. Playback the just recorded portion in SLP mode.
3. Connection the oscilloscope to TP8101.
4. Place the deck in STILL mode.
5. Adjust the VR8103 so that the difference between A and B becomes within 5%.

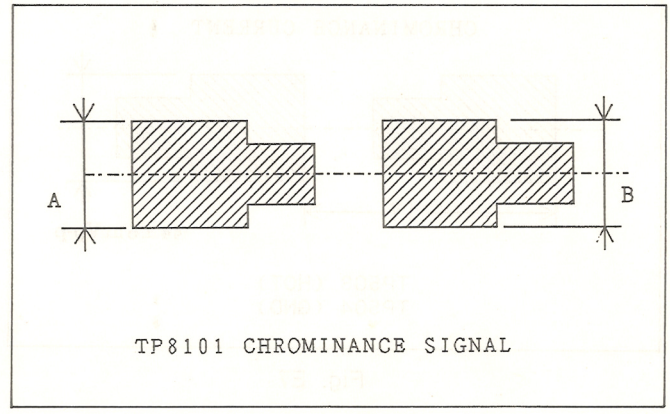

Fig. E11

AUDIO SECTION

2-4-13. AUDIO BIAS CURRENT ADJUSTMENT

TP	ADJ.	MODE	INPUT
TP4002 (+) TP4003 (−)	VR4002	RECORDING	
TAPE	M. EQ.	SPEC.	
BLANK TAPE	V.T.V.M	2.6±0.1mVrms	

Note:
Before the electrical adjustment in this section ,make the short circuit between Audio Input Jack and GND except for especial instructions in each adjustment item.

2-4-14. AUDIO PLAYBACK LEVEL ADJUSTMENT

TP	ADJ.	MODE	INPUT
TP4001	VR4001	SELF RECORDING	SIGNAL GENERATOR (1kHz, −10dB)/ VIDEO SIGNAL
TAPE	M. EQ.	SPEC.	
BLANK TAPE	SIGNAL GENERATOR/ V.T.V.M	E-E LEVEL=−8±2dB PLAYBACK LEVEL= E-E LEVEL ±1dB	

Not e:
Before this adjustment,"Tape Interchangeability Adjustment" must be completed.

1. Connect the V.T.V.M to TP4001 and Confirm that the E−E level is −8 +− 2dB.
2. Record the video and audio signals and play back the just recorded portion.
3. Adjust the VR4001 so that playback level becomes E−E level +− 1dB.

TIMER SECTION

2-4-15. AN ELECTRICITY FAILURE DETECTION ADJUSTMENT

TP	ADJ.	MODE	INPUT
IC7551-12	VR7502		
TAPE	M. EQ.	SPEC.	
	OSCILLO-SCOPE/ 2 DC POWER SUPPLIES		

Note:
1) Do not connect the AC power plug.
2) Make a short circuit at C7518 to discharge. (refer to the Technical Information)

1. Set the voltage of the DC power supply (A) for 4.6 +− 0.05V and supply it to IC7551−8 (+) and GND (−).
2. Set the voltage of the DC power supply (B) for 45 +− 1V and supply it to JA−8 (D7555−anode side).
3. Turn the VR7502 until the voltage at pin12 of IC7551 is High Level.
4. Turn the VR7502 slowly until the voltage at TP7508 is Low Level (0V).
5. Change the voltage of the DC power supply (A) from 4.6 +− 0.05V to 4.8 +− 0.05V.
6. Confirm the voltage at pin12 of IC7551 is High Level.

2-4-16. TIMER CLOCK ADJUSTMENT

TP	ADJ.	MODE	INPUT
IC7501-37	C7502		
TAPE	M. EQ.	SPEC.	
	FREQUENCY COUNTER	3906.25±0.008μs	

Note:
1) Do not connect the AC power plug.
2) Make a short circuit at C7518 to discharge. (refer to the Technical Information)

1. Set the voltage of the DC power supply for 5.8V +− 0.1V and supply it to P7501−6 (+) and GND (−).
2. Connect a jumper wire between P7501−7 and GND.
3. Connect the frequency counter to IC7501−37.
4. Adjust C7502 for 3906.25us +− 0.008us.

LOCATION OF TEST POINTS & CONTROLS

MAIN C.B.A.

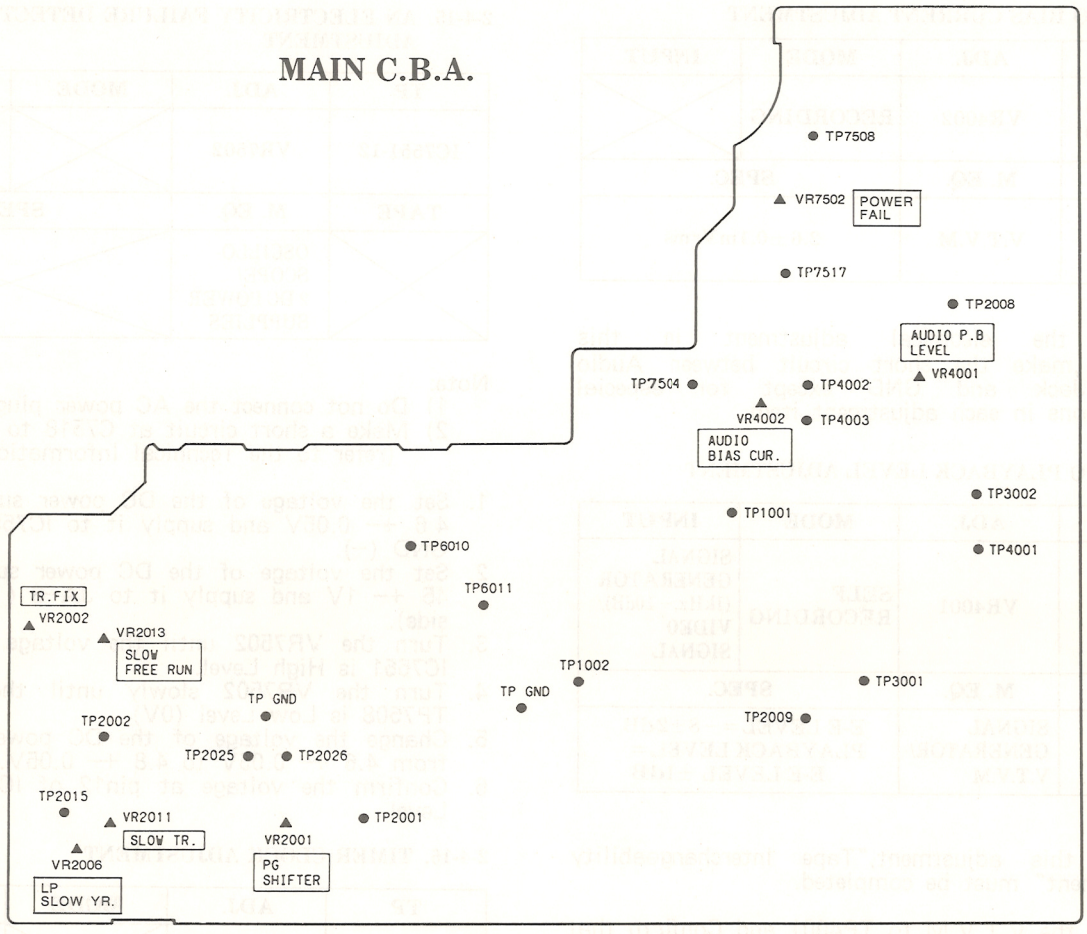

SERVO PACK C.B.A.

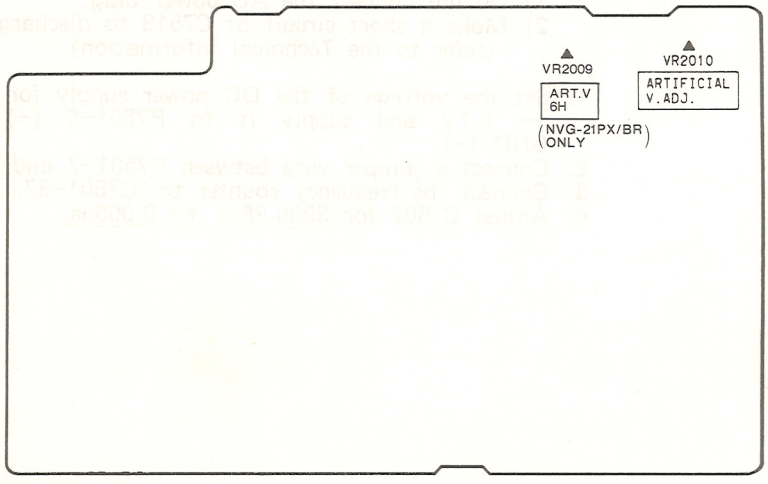

OPERATION C.B.A.

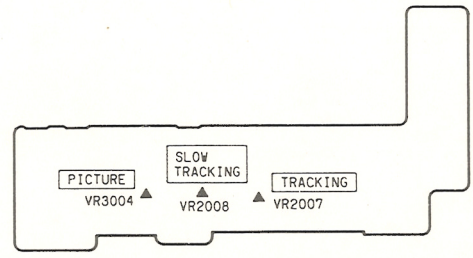

LUMINANCE & CHROMINANCE PACK C.B.A.

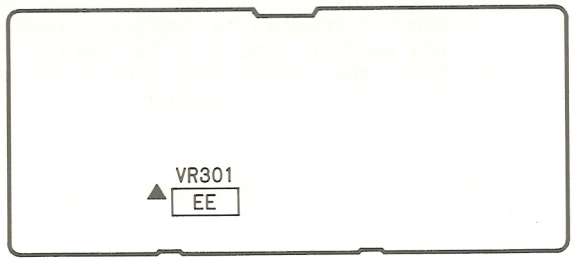

HEAD AMP PACK C.B.A.

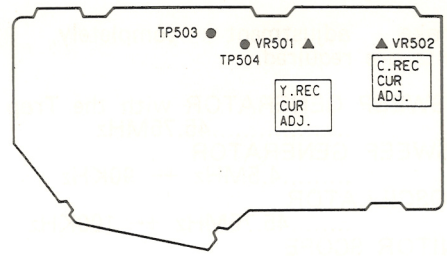

TIMER C.B.A.

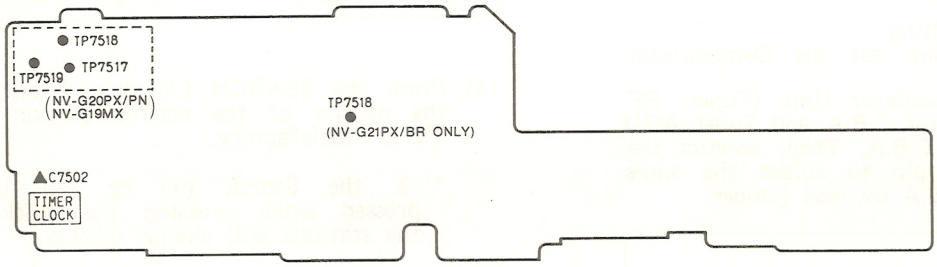

NTSC-PAL (M) CONVERTER C.B.A. (NV-G21BR)

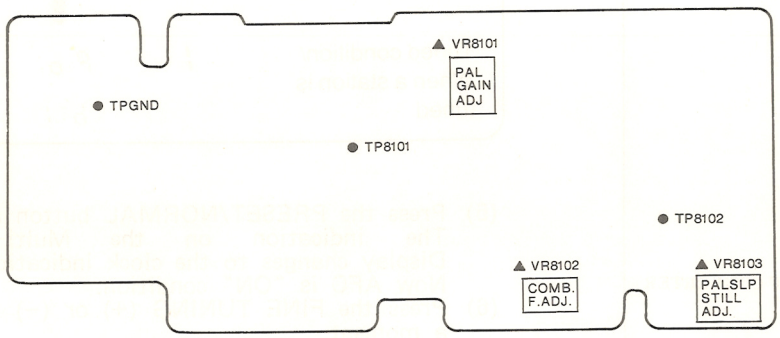

AUTO DETECT PACK C.B.A. (NV-G21BR)

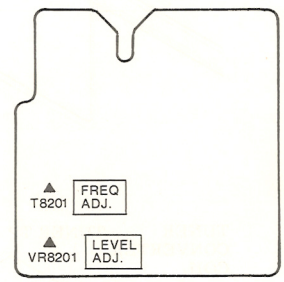

TV DEMODULATOR PACK C.B.A.

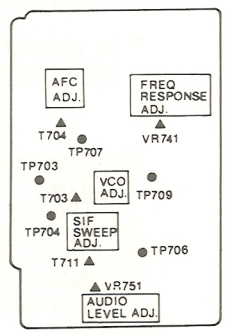

TUNER/ARU PACK C.B.A.

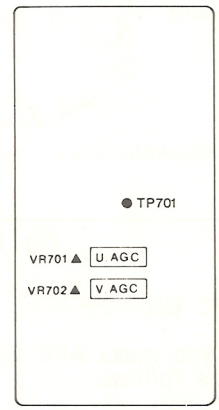

TV DEMODULATOR SECTION

2-4-17. TEST EQUIPMENT

To make adjustment completely, following equipments are required.

1. VIF SWEEP GENERATOR with the Trap Adjustor 45.75MHz
2. SIF SWEEP GENERATOR .....4.5MHz +– 90KHz
3. CW OSCILLATOR .....45.75MHz +– 100KHz
4. MONITOR SCOPE
5. OSCILLOSCOPE
6. DIGITAL VOLT METER
7. TUNING AMPLIFIER
8. MULTI VOICE MODULATOR (M.V.M)

Note:

1) Demodulator Unit Setting
To make this adjustment, set the Demodulator Unit as follows.
First, remove the Demodulator Unit (Tuner, RF Converter, TV Demodulator C.B.A and Tuner ARU C.B.A) from the Main C.B.A. Then, connect the TV Demodulator Pack pin to solder the same portions of the Main C.B.A by lead jumper.

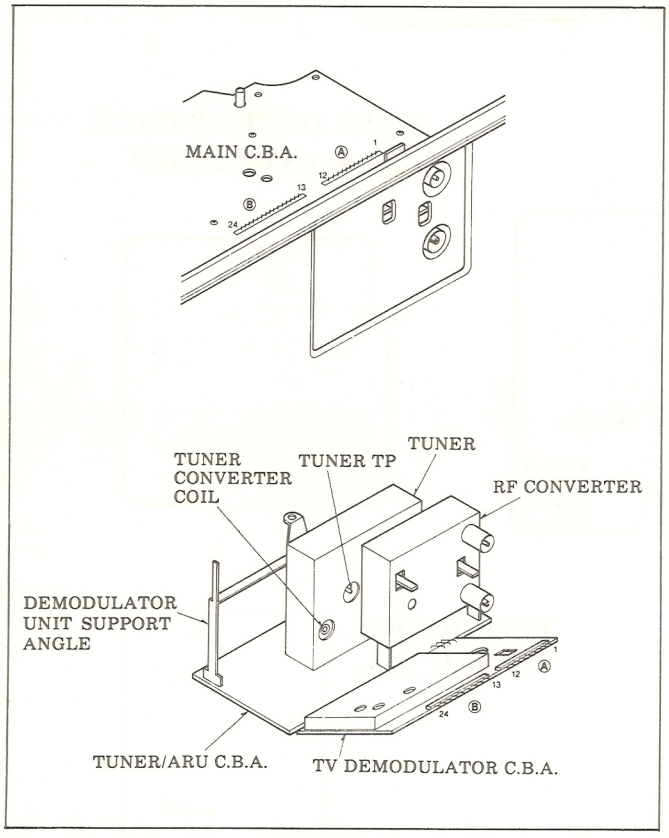

Fig. E12

2) AFC ON–OFF

When you make AFC ON or OFF condition, set the VTR as follows.

* In case of NV–G21 PX.

(1) Press the PRESET/NORMAL button.
The indication on the Multi–Function Display changes from the clock indication to the position indication.
(2) Press the Channel Up or Down button to select a programme position (channel) which you want to tune to a TV station.
(3) Press the BAND/AFC button to select the "L", "H" or "U" position.

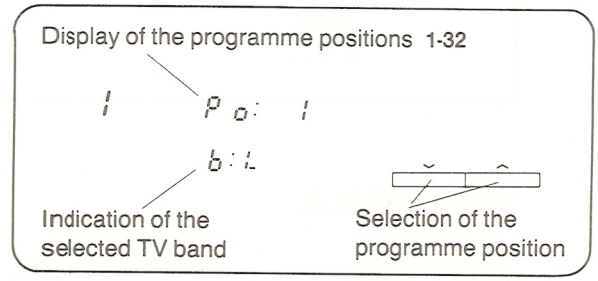

(4) Press the SEARCH (+) or (–) button until the picture of the desired station on your TV is satisfactory.

* If the Search (+) or (–) button is pressed while pressing the Quick Button, the stations will change quickly.

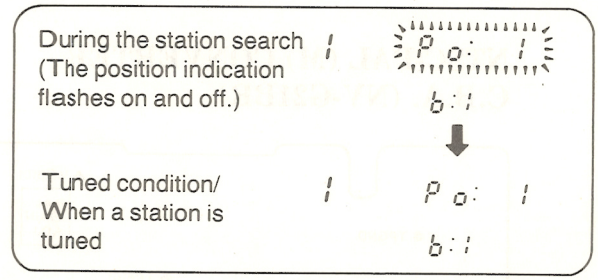

(5) Press the PRESET/NORMAL button again.
The indication on the Multi–Function Display changes to the clock indication.
Now AFC is "ON" condition.
(6) Press the FINE TUNING (+) or (–) button in a moment.
Now AFC is "OFF" condition.
(7) Press the BAND/AFC button.
Now AFC is "ON" condition again.

* In case of NV–G21BR, NV–G20PX/PN, NV–G19MX

(1) Press the PRESET button.
The indication on the Multi–Function Display changes from the clock indication to the position indication.
(2) Press the Channel Up or Down button to select a programme position (channel) which you want to tune to a TV station.

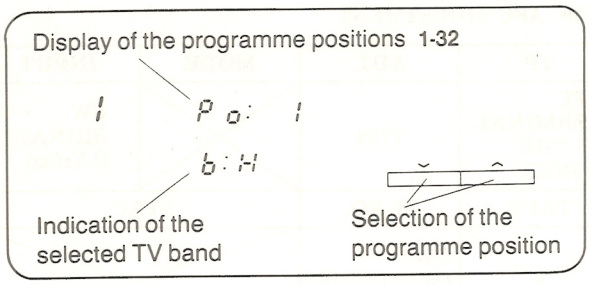

(3) Press the FINE SEARCH (+) or (−) button until the picture of the desired station on your TV is satisfactory.
* If the Search (+) or (−) button is pressed while pressing the FAST Button, the stations will change quickly.
you want to tune to a TV station.

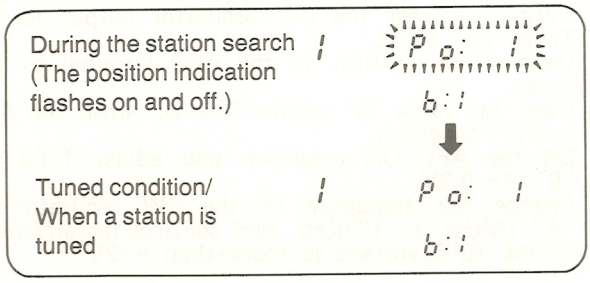

(4) Press the PRESET button again.
The indication on the Multi−Function Display changes to the clock indication.
Now AFC is "ON" condition.
(5) Press the FINE SEARCH (+) or (−) bitton in a moment.
Now AFC is "OFF" condition.

2-4-18. VIF SWEEP ADJUSTMENT

TP	ADJ.	MODE	INPUT
TP707	T703, TUNER CONVERTER COIL		VIF SWEEP
TAPE	**M. EQ.**	**SPEC.**	
	VIF SWEEP/ MONITOR SCOPE	Refer to VIF Specification chart. (Fig. E-20)	

1. Set the BAND SW for VHF high position (VH) and set the DC power supply for 20V and suplly it to BT Terminal of the Tuner after removing TV Demodulator C.B.A −(9) to cut off the BT voltage from IC7551−(2).
2. Set the AFC OFF condition.
3. Connect a jumper wire between AGC Terminal of the Tuner and GND.
4. Connect a capasitor (50V/1 uF) between TP703 and GND.
5. Connect the VIF sweep generator to the Tuner Test Point and connect the monitor scope to TP707 as shown in Fig. E16.
(Marker Frequencys of VIF Sweep waveform are shown in Fig. E17)

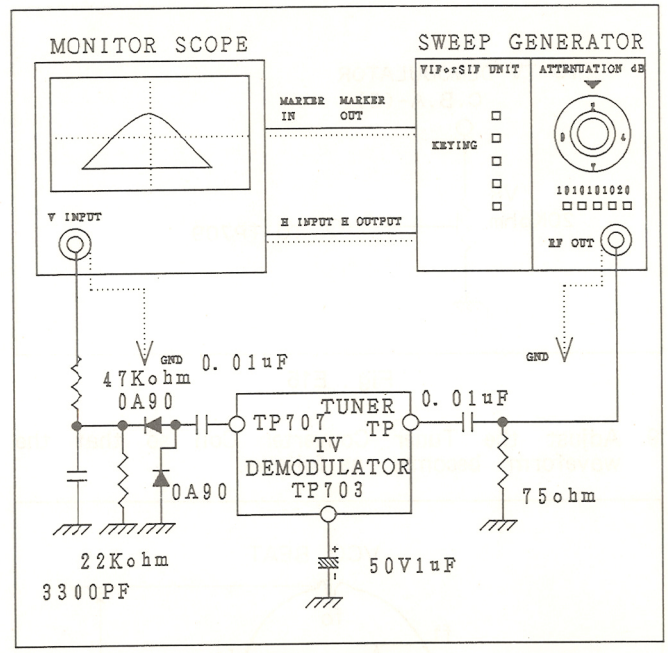

Fig . E13

		FREQUENCY
MARKER	fc	42.17 MHz
	f1	42.75 MHz
	f0	43.875MHz
	f2	45.00 MHz
	fp	45.75 MHz

6. Adjust T703 so that the VCO beat is placed to center of P1 and P2 mackers on the output waveform as shown in Fig. E18.

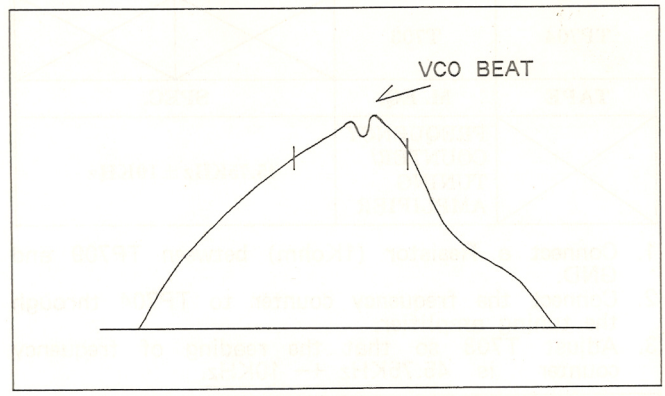

Fig . E14

7. Adjust the VIF sweep generator so that the output sweep waveform level becomes 0.3Vp−p on the monitor scope.
Then release the attenuator of the VIF sweep generator for 20dB.
8. Connect the Adjustment Jig as shown in Fig. E19, then adjust VR of Adjustment Jig so that the output sweep waveform level becomes 0.3Vp−p on the monitor scope.

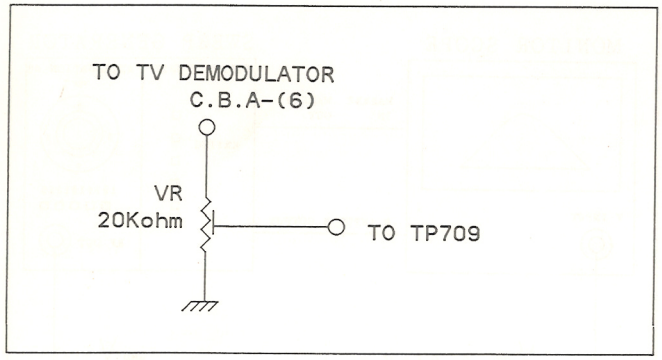

Fig . E15

9. Adjust the Tuner Converter Coil so that the waveform becomes as follows.

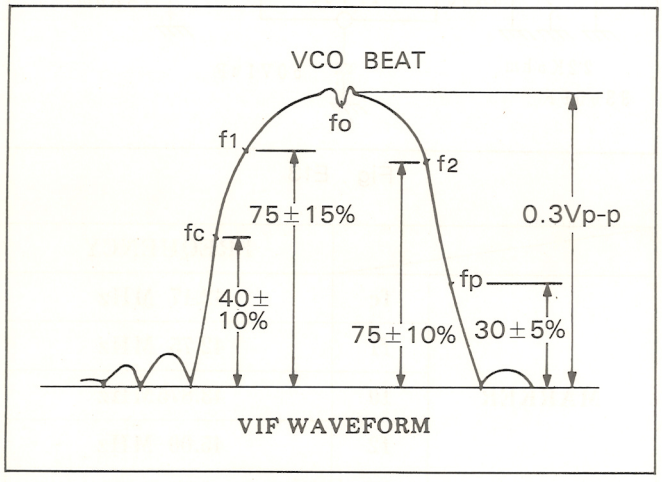

Fig. E16

2-4-19. VCO ADJUSTMENT

TP	ADJ.	MODE	INPUT
TP704	T703		
TAPE	M. EQ.	SPEC.	
	FREQUENCY COUNTER/ TUNING AMPLIFIER	45.75KHz ±10KHz	

1. Connect a Resistor (1Kohm) between TP709 and GND.
2. Connect the frequency counter to TP704 through the tuning amplifier.
3. Adjust T703 so that the reading of frequency counter is 45.75KHz +− 10KHz.

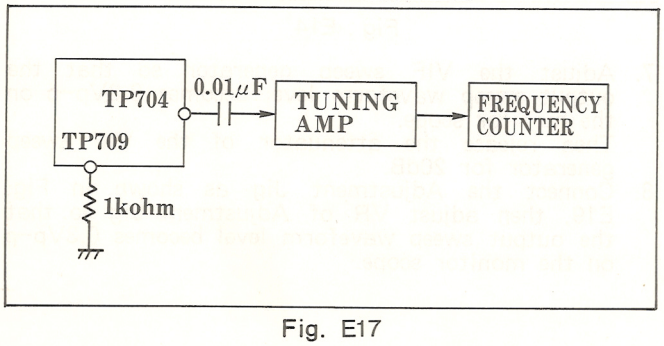

Fig. E17

2-4-20. AFC ADJUSTMENT

TP	ADJ.	MODE	INPUT
AFC TERMINAL OF THE TUNER	T704		CW SIGNAL (1 Vrms)
TAPE	M. EQ.	SPEC.	
	CW OSCILLATOR/ D.V.M.		

1. Set the BAND SW for the VHF high position (VH) and set the DC power supply for 20 +− 1V and supply it to BT Terminal of the Tuner after removing TV Demodulator C.B.A−(9) to cut of the BT voltage from IC7551−(2).
2. Set the CW oscillator output for "A" MHz and 1Vrms. Connect the CW oscillator output to the Tuner Test Point.
3. Connect the D.V.M. to the AFC terminal of the tuner.
4. Read the value "B" of the D.V.M., when the AFC is OFF condition.
5. Set the AFC ON condition and adjust T704 for "B" +− 0.3V.
6. Change the frequency of the CW oscillator to "A" (MHz) +− 100KHz, and confirm the difference of the AFC voltage is more than +−2V

2-4-21. SIF SWEEP ADJUSTMENT

TP	ADJ.	MODE	INPUT
VR751-HOT	T711		SIF SWEEP
TAPE	M. EQ.	SPEC.	
	VIF SWEEP/ MONITOR SCOPE	A=4.5MHz	

1. Set the DC power supply for 20 +− 1V and supply it to BT Terminal of the Tuner after removing TV Demodulator C.B.A −(9) to cut of the BT voltage from IC7551 − (2).
2. Set the AFC OFF condition.
3. Connect the SIF sweep generator to TP706 and connect the monitor scope to TV Demodulator C.B.A−(15) as shown in Fig. E21.

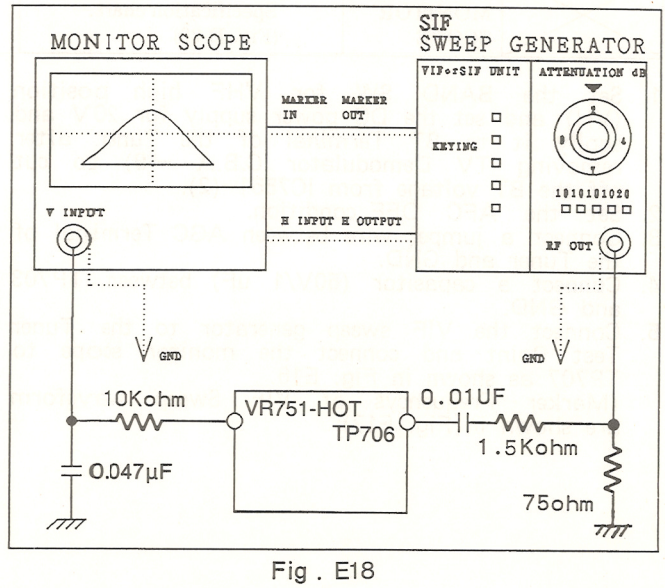

Fig . E18

4. Connect the Jig to both points TP709 and TV Demodulator C.B.A–(6). (Refer to Fig. E19)
   Adjust the VR of the Jig so that the DC level becomes less than 3V.
5. Set the output of SIF sweep generator for 250mVrms at no load.
7. Adjust T711 so that the attenuation of (A) trap becomes minimum.
   And adjust for maximum peak–to– peak amplitude of response "S" curve as shown in Fig. E22.

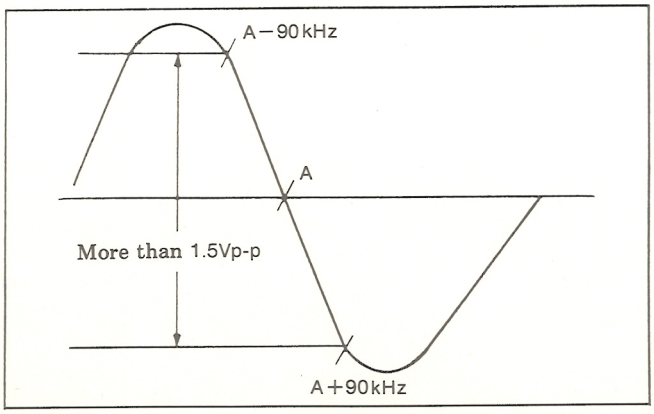

Fig. E19

8. Confirm that the level between (A) +– 90KHz marker position is more than 1.5Vp–p.

2-4-22. VIDEO FREQUENCY RESPONSE ADJUSTMENT

TP	ADJ.	MODE	INPUT
TV DEMODU-LATOR C.B.A.-(13)	VR741		VIDEO SWEEP V. MOD: 70%, 75dBμ
TAPE	M. EQ.	SPEC.	
	OSCILLO-SCOPE/ VIDEO SWEEP/ M.V.M		

1. Supply a video sweep signal from the Video sweep generator to the input of the M.V.M.
2. Connect the output of the M.V.M to RF Input of the Deck.
3. Press the SEARCH (+) or (–) button so that the modulated RF signal on the channel 12 is able to receive.
4. Set the AFC ON condition.
5. Adjust VR741 so that the waveform at the Video out (TV Demodulator C.B.A–(13)) becomes as shown in Fig. E23.

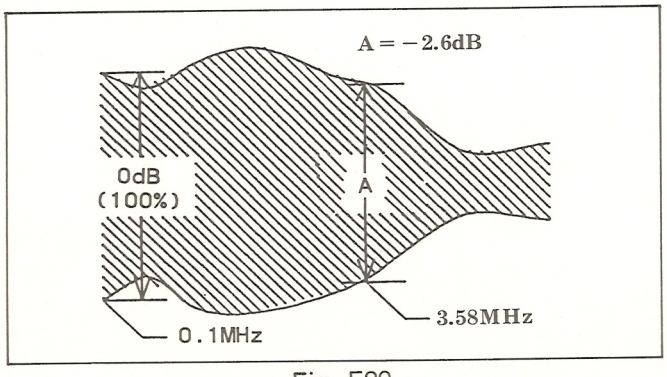

Fig. E20

2-4-23. AUDIO LEVEL ADJUSTMENT

TP	ADJ.	MODE	INPUT
AUDIO OUT (TV DEMODU-LATOR C.B.A.-(15))	VR751		VIDEO COLOUR BAR V. MODU: 87.5%, 75dBμ AUDIO 400Hz A. MODU: 30% (60%, 100%) (15kHz DEV)
TAPE	M. EQ.	SPEC.	
	RC OSC/ OSCILLO-SCOPE or D.V.M/ M.V.M/ PATTERN GENERATOR	120±6mVp-p	

1. Supply a video signal (COLOUR BAR pattern) from the pattern generator and 400Hz sine wave from RC oscillator to the input of the M.V.M.
2. Connect the output of the M.V.M to RF Input of the Deck.
3. Press the SEARCH (+) or (–) button so that the modulated RF signal on the channel 12 is able to receive.
4. Set the AFC ON condition.
5. Connect the oscilloscope or D.V.M to TV Demodulator C.B.A–(15).
6. Adjust VR751 so that the audio level becomes 120 +– 6mVp–p.

2-4-24. AUDIO MUTING FREQUENCY ADJUSTMENT

TP	ADJ.	MODE	INPUT
IC7651-④	VR7660		
TAPE	M. EQ.	SPEC.	
	FREQUENCY COUNTER	15735±100Hz	

Note:
To make this adjustment, please prepare the following circuit as shown in Fig. E24.

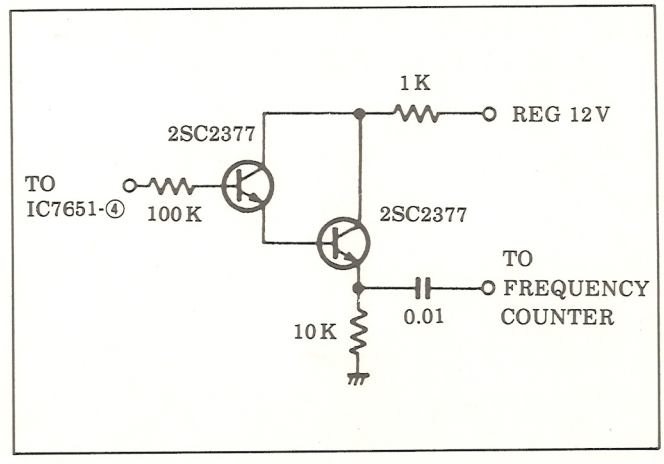

Fig. E21

SECTION 3
BLOCK DIAGRAMS & SCHEMATIC DIAGRAMS
3-1. SYSTEM CONTROL BLOCK DIAGRAM

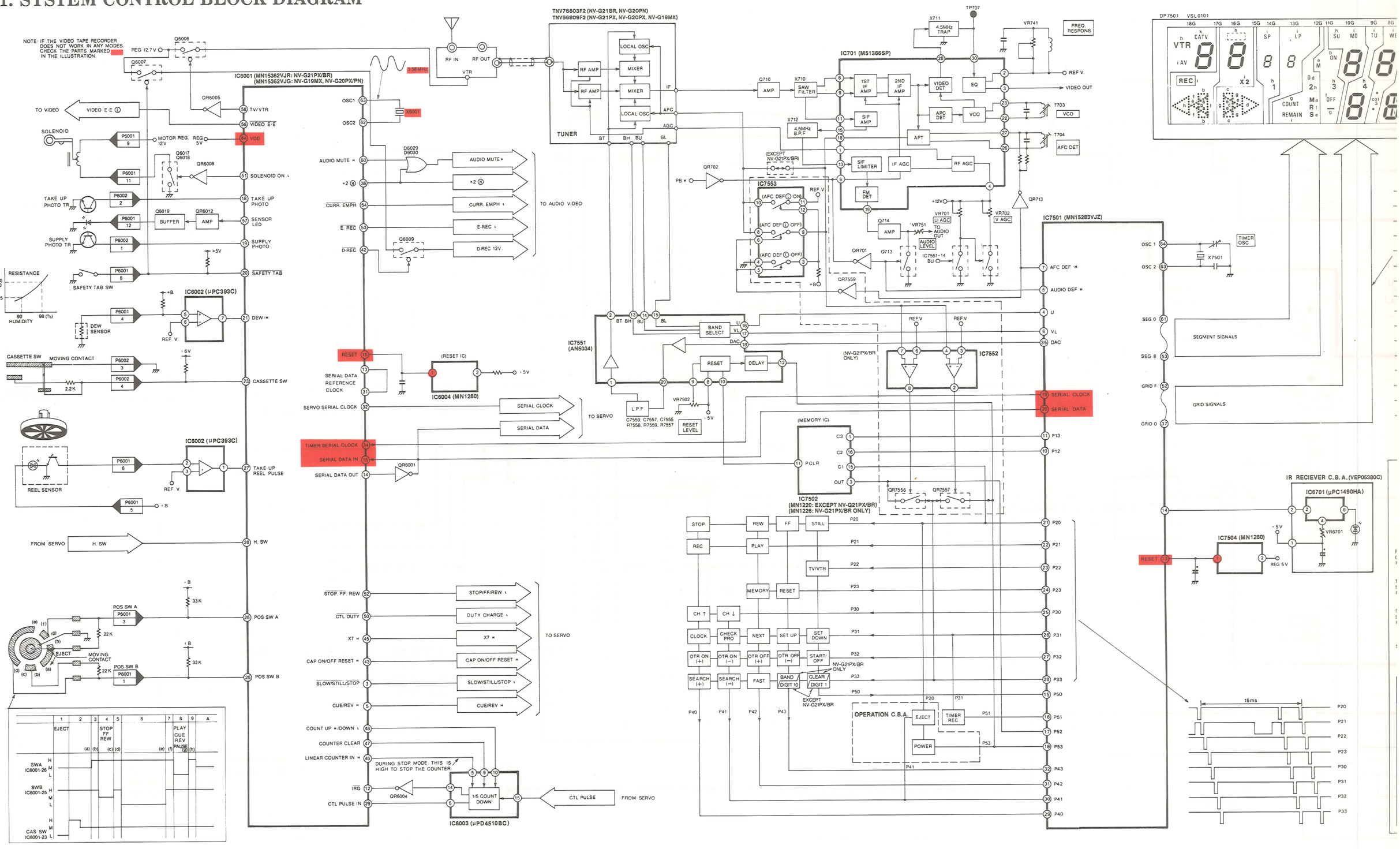

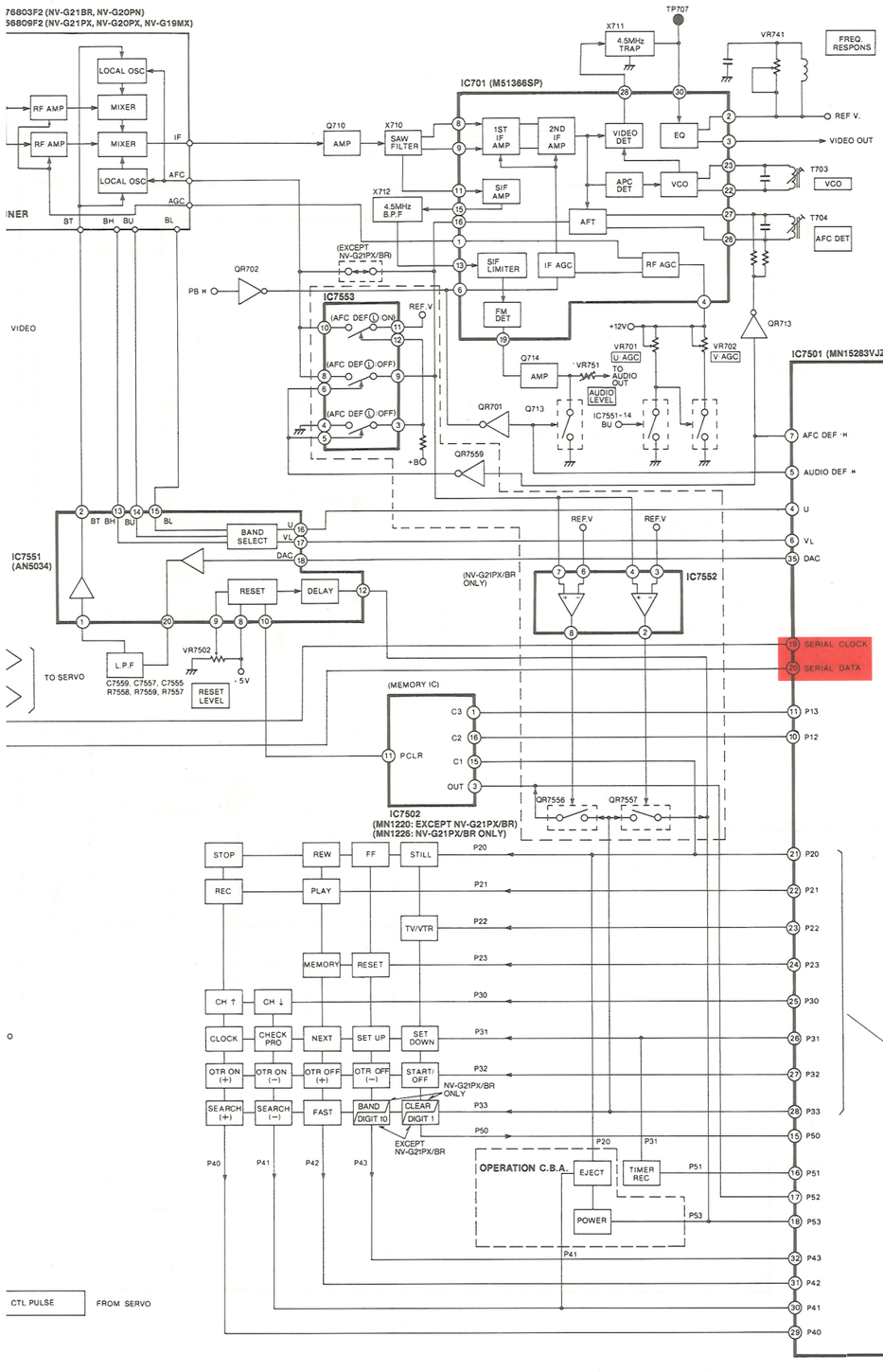

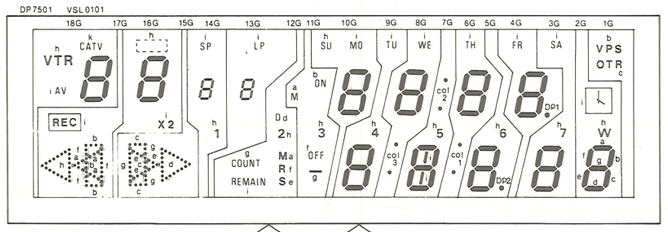

SERIAL DATA TRANSMISSION

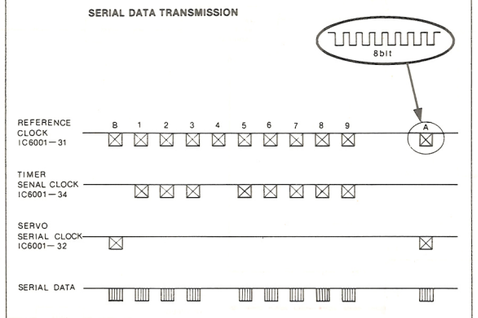

DATA B	SYSTEM CONTROL	→	SERVO	MODE INSTRUCTION
DATA 1	SYSTEM CONTROL	→	TIMER	CASSETTE DOWN,COUNTER, etc.
DATA 2	SYSTEM CONTROL	←	TIMER	TIMER DATA, IR DATA
DATA 3	SYSTEM CONTROL	←	TIMER	KEY DATA, VTR/TV, etc.
DATA 5	SYSTEM CONTROL	→	TIMER	VTR MODE, VV/EE etc.
DATA 6	SYSTEM CONTROL	→	TIMER	POWER ON, X2, SLOW SPEED
DATA 7	SYSTEM CONTROL	→	TIMER	LINEAR COUNTER, etc.
DATA 8	SYSTEM CONTROL	→	TIMER	LINEAR COUNTER
DATA 9	SYSTEM CONTROL	→	TIMER	LINEAR COUNTER
DATA B	SYSTEM CONTROL	→	SERVO	MODE INSTRUCTION

SYMBOL	TRUTH VALUE TABLE
INVERTER 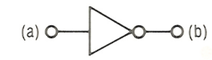	IN (a) H L OUT (b) L H
COMPARTOR 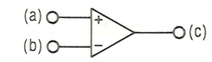	IN (a)/(b) (a)>(b) (a)<(b) OUT (c) H L
AND CIRCUIT 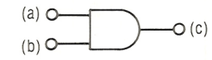	IN (a) L L H H (b) L H L H OUT (c) L L L H
OR CIRCUIT	IN (a) L L H H (b) L H L H OUT (c) L H H H
THREE STATES BUFFER 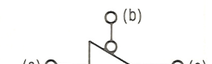	IN (a) H L H or L (b) L L H OUT (c) H L ※ ※ High Impedance
TR. SW (NPN TYPE) 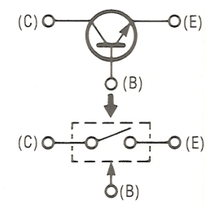	BASE H L TR. SW ON OFF
TR. SW (PNP TYPE) 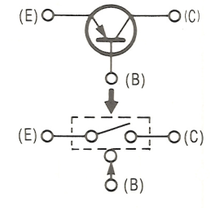	BASE H L TR. SW OFF ON
R-S TYPE FLIP-FLOP 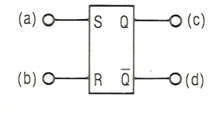	IN (a) L L ⊓ (b) L ⊓ L OUT (c) ※ L H (d) ◆ H L ※ Initial condition is maintained. ◆ Initial condition is reverced.

Next Page:
SERVO Section

3-2. SERVO BLOCK DIAGRAM (NV-G21PX/BR)

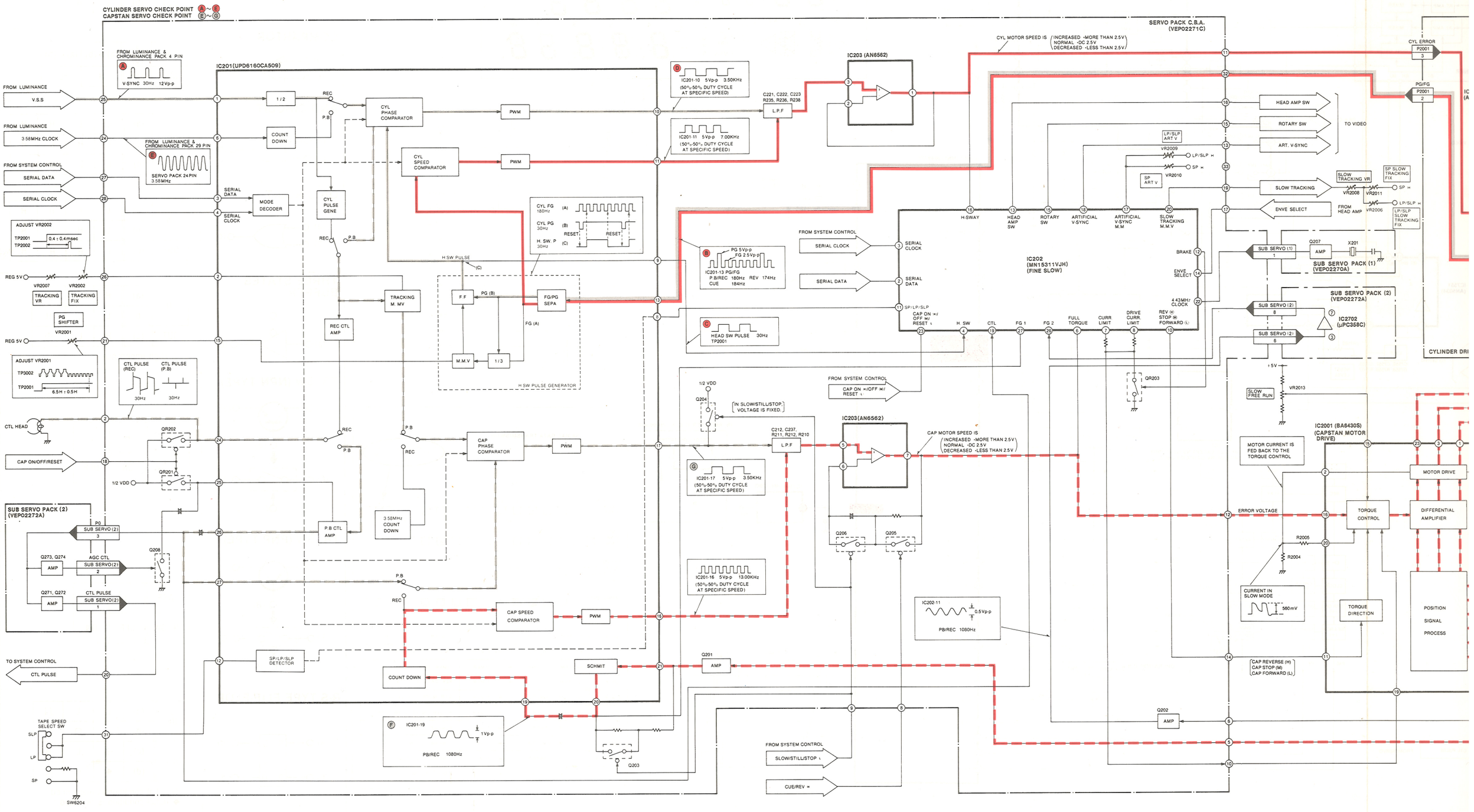

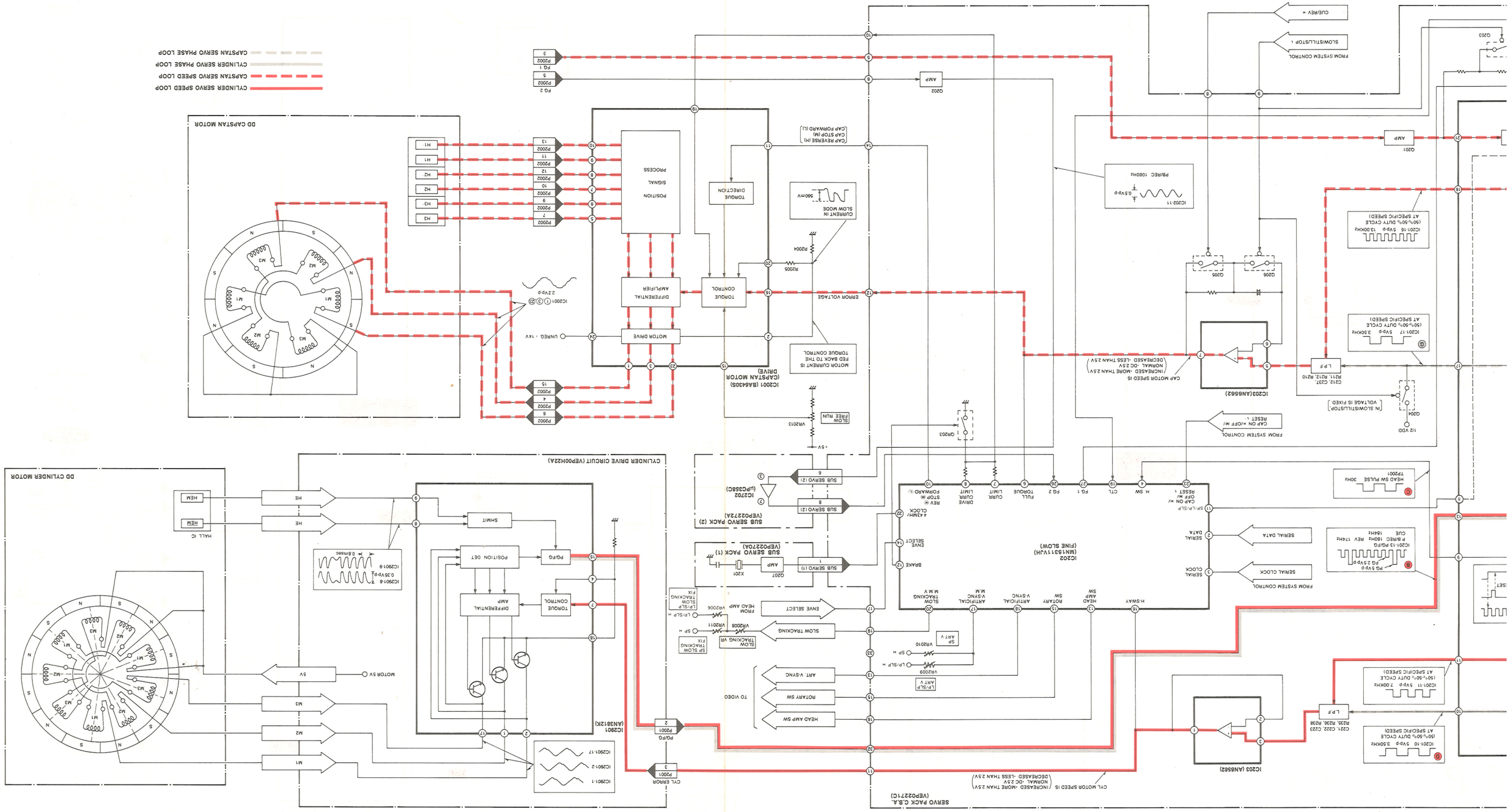
CYLINDER SERVO SPEED LOOP
CAPSTAN SERVO SPEED LOOP
CYLINDER SERVO PHASE LOOP
CAPSTAN SERVO PHASE LOOP
DD CAPSTAN MOTOR
DD CYLINDER MOTOR
CYLINDER DRIVE CIRCUIT (VEP00H22A)
SERVO PACK C.B.A.
(VEP02271C)
IC2001 (BA6430S)
CAPSTAN MOTOR DRIVE
IC2202 (MN1531UH)
(FINE SLOW)
IC203 (AN6562)
IC2901 (AN6381K)
SUB SERVO PACK (2)
(VEP02272A)
SUB SERVO PACK (1)
(VEP02270A)
HALL IC
FROM SYSTEM CONTROL
SERIAL DATA
SERIAL CLOCK
CAP ON w/OFF w/RESET
SLOW/STILL/STOP
CUE/REV
HEAD SW PULSE 30Hz
TP2001
P.B.REC 180Hz REV 174Hz CUE
PG 2.5Vp-p
PB/REC 1080Hz
0.5Vp-p
MOTOR 5V
CAP MOTOR SPEED IS (INCREASED -MORE THAN 2.5V / NORMAL -0C 2.5V / DECREASED -LESS THAN 2.5V)
CYL MOTOR SPEED IS (INCREASED -MORE THAN 2.5V / NORMAL -0C 2.5V / DECREASED -LESS THAN 2.5V)
IN SLOW/STILL/STOP VOLTAGE IS FIXED
CAPSTAN MOTOR SPEED IS FED BACK TO THE TORQUE CONTROL
CAP FORWARD (L)
CAP REVERSE (H)
CAP STOP (M)
CURRENT IN SLOW MODE
560mV
ERROR VOLTAGE
TORQUE DIRECTION
TORQUE CONTROL
DIFFERENTIAL AMPLIFIER
MOTOR DRIVE
POSITION SIGNAL PROCESS
SLOW TRACKING
SLOW TRACKING VR
SP SLOW TRACKING FIX
LP/SLP SLOW TRACKING FIX
ENVE SELECT
FROM HEAD AMP
SP ART V
LP/SLP ART V
ART. V.SYNC
ROTARY SW
HEAD AMP SW
TO VIDEO
SHMIT
POSITION DET
PG/RG
OFFSET
AMP
SLOW/STILL/STOP
CUE/REV
CAP ON w/OFF w/RESET
SERIAL DATA
SERIAL CLOCK
H.SW
CTL
FG 1
FG 2
PULL TORQUE
CURR LIMIT
DRIVE CURR LIMIT
REV STOP FORWARD
4.43MHz CLOCK
H.SWAY
HEAD AMP SW
ROTARY SW
ARTIFICIAL V.SYNC
ARTIFICIAL M.M
SLOW TRACKING M.M.V
BRAKE
ENVE SELECT
SERIAL DATA
SERIAL CLOCK
SP/LP/SLP
AMP
LPF
1/2 VDD
IC201-17 5Vp-p 3.5KHz (50%-50% DUTY CYCLE AT SPECIFIC SPEED)
IC201-18 5Vp-p 13.00KHz (50%-50% DUTY CYCLE AT SPECIFIC SPEED)
IC201-10 5Vp-p 3.5KHz (50%-50% DUTY CYCLE AT SPECIFIC SPEED)
IC201-11 5Vp-p 7.00KHz (50%-50% DUTY CYCLE AT SPECIFIC SPEED)
IC202-11 0.5Vp-p
IC201-13 PG/FG
IC2901-1
IC2901-2
IC2901-7
IC2901-8 0.35Vp-p 0.8msec
IC2901-9
IC2001 (1)(3)(2) 2.2Vp-p
UNREG +14V
+5V
MOTOR 5V
P2002 1 FG 1
P2002 3 FG 2
P2002 5
P2002 13
P2002 11
P2002 12
P2002 10
P2002 7
P2002 9
P2002 8
P2002 15
P2002 4
P2002 6
P2001 2 PG/FG
P2001 3 CYL ERROR
M1+ M1- M2+ M2- M3+ M3-
HE HEM
R2004 R2005 VR2013 VR2009 VR2010 VR2011 VR2006 VR2008
Q201 Q202 Q203 Q204 Q205 Q206 Q207
X201
C212, C237, R211, R212, R210
C221, C222, C223, R235, R236, R238

3-3. SERVO BLOCK DIAGRAM (NV-G20PX/PN, NV-G19MX)

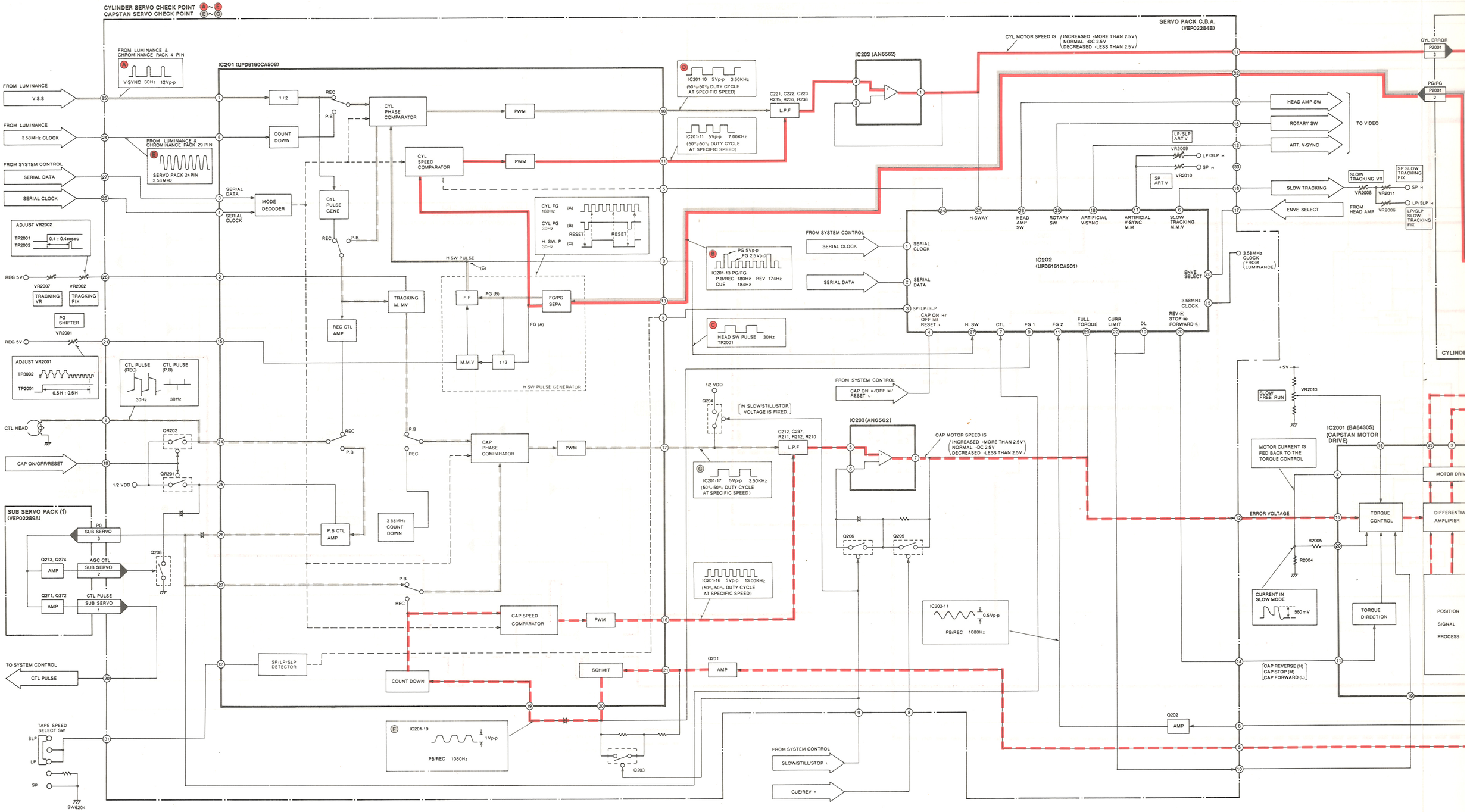

SERVO PACK C.B.A.
(VEP02284B)

CYL MOTOR SPEED IS (INCREASED :MORE THAN 2.5V / NORMAL :DC 2.5V / DECREASED :LESS THAN 2.5V)

IC203 (AN6562)

D IC201-10 5Vp-p 3.50KHz (50%-50% DUTY CYCLE AT SPECIFIC SPEED)

C221, C222, C223 R235, R236, R238 L.P.F

IC201-11 5Vp-p 7.00KHz (50%-50% DUTY CYCLE AT SPECIFIC SPEED)

RESET

B IC201-13 PG/FG 5Vp-p / FG 2.5Vp-p
P.B/REC 180Hz REV 174Hz
CUE 184Hz

FROM SYSTEM CONTROL
SERIAL CLOCK
SERIAL DATA

IC202
(UPD6161CA501)

1 SERIAL CLOCK
2 SERIAL DATA
3 SP/LP/SLP
4 CAP ON H/OFF M/ RESET L
24 H-SWAY
21 HEAD AMP SW
26 ROTARY SW
23 ARTIFICIAL V-SYNC
18 ARTIFICIAL V-SYNC M.M
17 SLOW TRACKING M.M.V
8 ENVE SELECT
29 3.58MHz CLOCK (FROM LUMINANCE)
15 3.58MHz CLOCK
H SW 27
CTL 7
FG 1 9
FG 2 11
FULL TORQUE 20
CURR LIMIT 22
DL 19
REV (H) STOP (M) FORWARD (L) 20

C HEAD SW PULSE 30Hz TP2001

1/2 VDD
Q204 (IN SLOW/STILL/STOP VOLTAGE IS FIXED)

IC203(AN6562)
C212, C237 R211, R212, R210 L.P.F
CAP MOTOR SPEED IS (INCREASED :MORE THAN 2.5V / NORMAL :DC 2.5V / DECREASED :LESS THAN 2.5V)

G IC201-17 5Vp-p 3.50KHz (50%-50% DUTY CYCLE AT SPECIFIC SPEED)

Q206 Q205

IC201-16 5Vp-p 13.00KHz (50%-50% DUTY CYCLE AT SPECIFIC SPEED)

IC202-11 0.5Vp-p PB/REC 1080Hz

Q201 AMP

FROM SYSTEM CONTROL
CAP ON H/OFF M/ RESET L

FROM SYSTEM CONTROL
SLOW/STILL/STOP L

CUE/REV H

Q203

Q202 AMP

FG 2 P2002 5
FG 1 P2002 3

HEAD AMP SW
ROTARY SW
ART. V-SYNC
TO VIDEO

LP/SLP ART.V
VR2009 LP/SLP H
SP H
SP ART.V
VR2010

SLOW TRACKING
ENVE SELECT

SLOW TRACKING VR
VR2008 VR2011 SP H
FROM HEAD AMP VR2006 LP/SLP H
SP SLOW TRACKING FIX
LP/SLP SLOW TRACKING FIX

+5V
SLOW FREE RUN
VR2013

MOTOR CURRENT IS FED BACK TO THE TORQUE CONTROL

IC2001 (BA6430S) (CAPSTAN MOTOR DRIVE)

ERROR VOLTAGE
R2005
R2004
CURRENT IN SLOW MODE 580mV

TORQUE CONTROL
TORQUE DIRECTION
MOTOR DRIVE
DIFFERENTIAL AMPLIFIER
POSITION SIGNAL PROCESS
UNREG +14V
IC2001 1 3 23 2.2Vp-p

CAP REVERSE (H)
CAP STOP (M)
CAP FORWARD (L)

P2002 6
P2002 4
P2002 15
P2002 7
P2002 9
P2002 10
P2002 12
P2002 11
P2002 13

H3 H3 H2 H2 H1 H1

DD CAPSTAN MOTOR

CYL ERROR P2001 3
PG/FG P2001 2

IC2901 (AN3812K)
IC2901-1
IC2901-2
IC2901-17

TORQUE CONTROL
DIFFERENTIAL AMP
PG/FG
POSITION DET
SHMIT

IC2901-8 0.35Vp-p
IC2901-9 0.8msec

MOTOR 5V
M1 M2 M3 5V

HE HE

HALL IC
HEM HEM

DD CYLINDER MOTOR

CYLINDER DRIVE CIRCUIT (VEP00H22A)

CYLINDER SERVO SPEED LOOP
CAPSTAN SERVO SPEED LOOP
CYLINDER SERVO PHASE LOOP
CAPSTAN SERVO PHASE LOOP

Next Page:
LUMINANCE &
CHROMINANCE
Section

3-4. LUMINANCE & CHROMINANCE BLOCK DIAGRAM

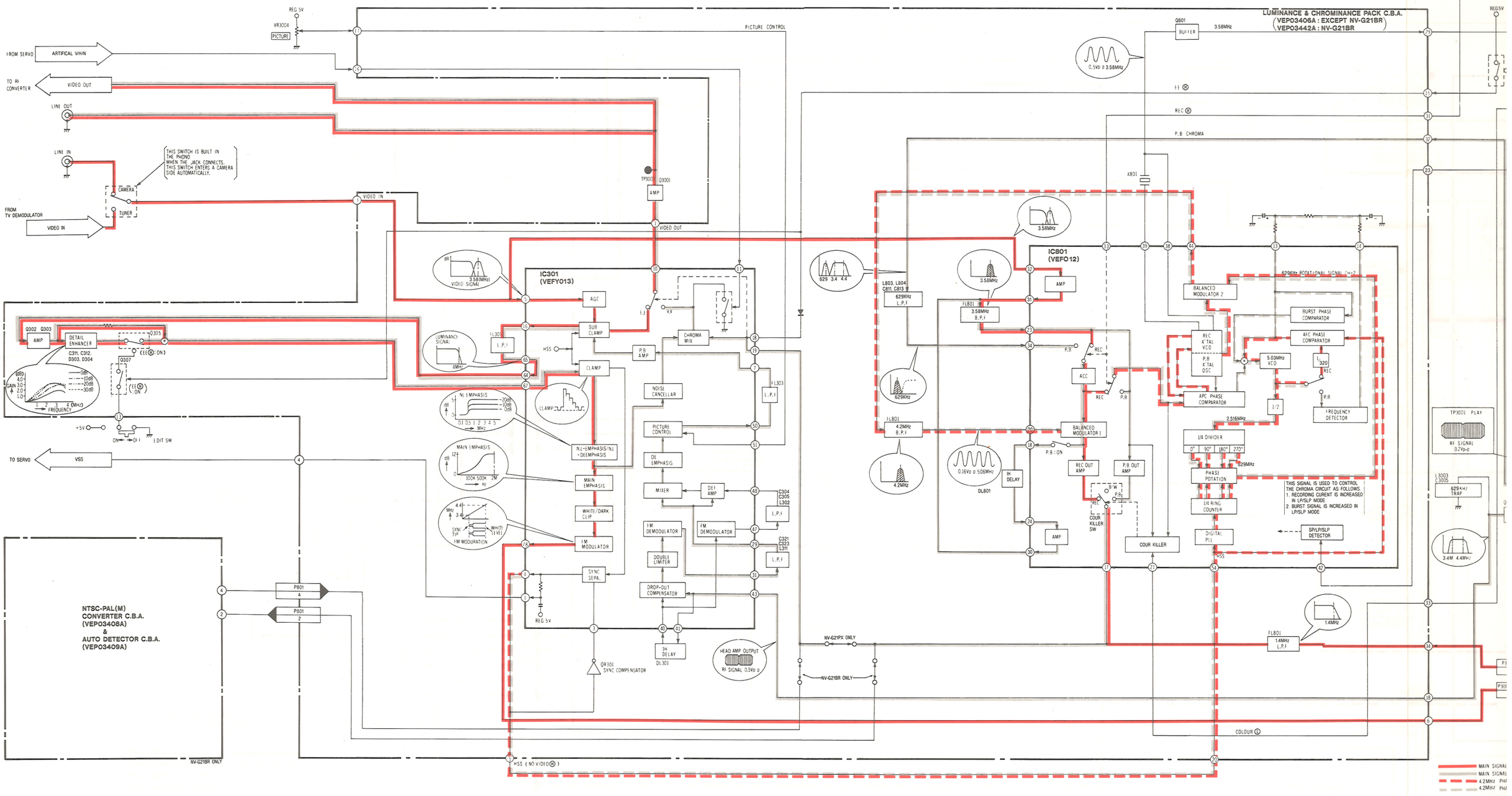

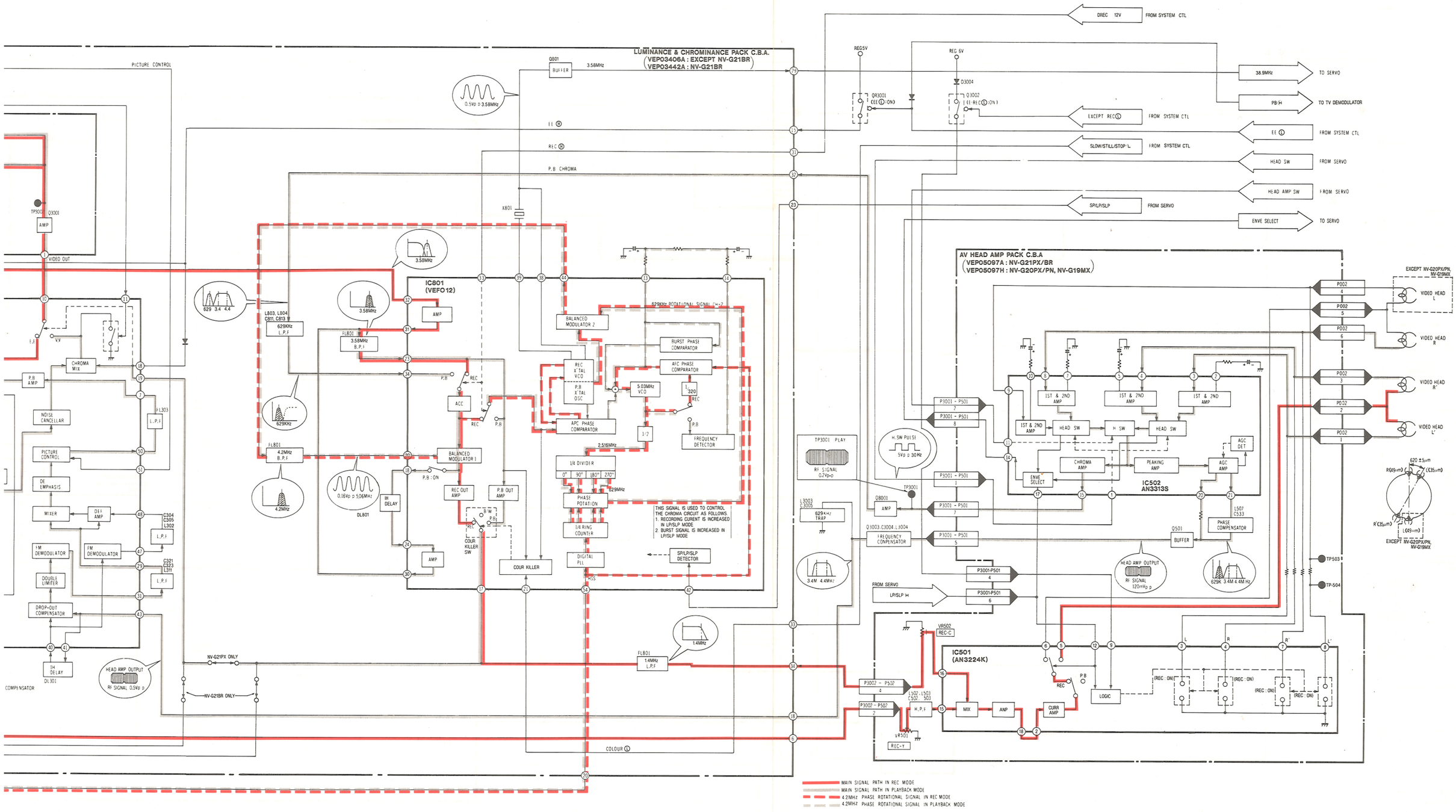
LUMINANCE & CHROMINANCE PACK C.B.A.
(VEP03406A : EXCEPT NV-G21BR)
(VEP03442A : NV-G21BR)
AV HEAD AMP PACK C.B.A
(VEP05097A : NV-G21PX/BR)
(VEP05097H : NV-G20PX/PN, NV-G19MX)
IC801
(VEFO12)
IC502
AN3313S
IC501
(AN3224K)
DREC 12V
FROM SYSTEM CTL
38.9MHz
TO SERVO
PB/H
TO TV DEMODULATOR
EXCEPT REC
SLOW/STILL/STOP
HEAD SW
HEAD AMP SW
SP/LP/SLP
ENVE SELECT
PICTURE CONTROL
VIDEO OUT
CHROMA MIX
NOISE CANCELLAR
DE EMPHASIS
MIXER
DEF AMP
FM DEMODULATOR
DOUBLE LIMITER
DROP-OUT COMPENSATOR
1H DELAY
BALANCED MODULATOR 2
BURST PHASE COMPARATOR
AFC PHASE COMPARATOR
APC PHASE COMPARATOR
FREQUENCY DETECTOR
BALANCED MODULATOR 1
REC OUT AMP
P.B OUT AMP
COUR KILLER
DIGITAL PLL
SP/LP/SLP DETECTOR
THIS SIGNAL IS USED TO CONTROL THE CHROMA CIRCUIT AS FOLLOWS.
1. RECORDING CURENT IS INCREASED IN LP/SLP MODE
2. BURST SIGNAL IS INCREASED IN LP/SLP MODE
TP3001 PLAY
RF SIGNAL 0.2Vp-p
H.SW PULSE 5Vp p 30Hz
FREQUENCY CONPENSATOR
FROM SERVO
LP/SLP H
HEAD AMP OUTPUT
RF SIGNAL 120mVp p
BUFFER
PHASE COMPENSATOR
AGC DET
AGC AMP
PEAKING AMP
CHROMA AMP
ENVE SELECT
1ST & 2ND AMP
HEAD SW
H SW
LOGIC
CURR AMP
MIX
ANP
NV-G21PX ONLY
NV-G21BR ONLY
COLOUR
EXCEPT NV-G20PX/PN, NV-G19MX
VIDEO HEAD L
VIDEO HEAD R
VIDEO HEAD R'
VIDEO HEAD L'
MAIN SIGNAL PATH IN REC MODE
MAIN SIGNAL PATH IN PLAYBACK MODE
4.2MHz PHASE ROTATIONAL SIGNAL IN REC MODE
4.2MHz PHASE ROTATIONAL SIGNAL IN PLAYBACK MODE

3-5. NTSC-PAL(M) CONVERTER & AUTO DETECT BLOCK DIAGRAM (NV-G21BR)

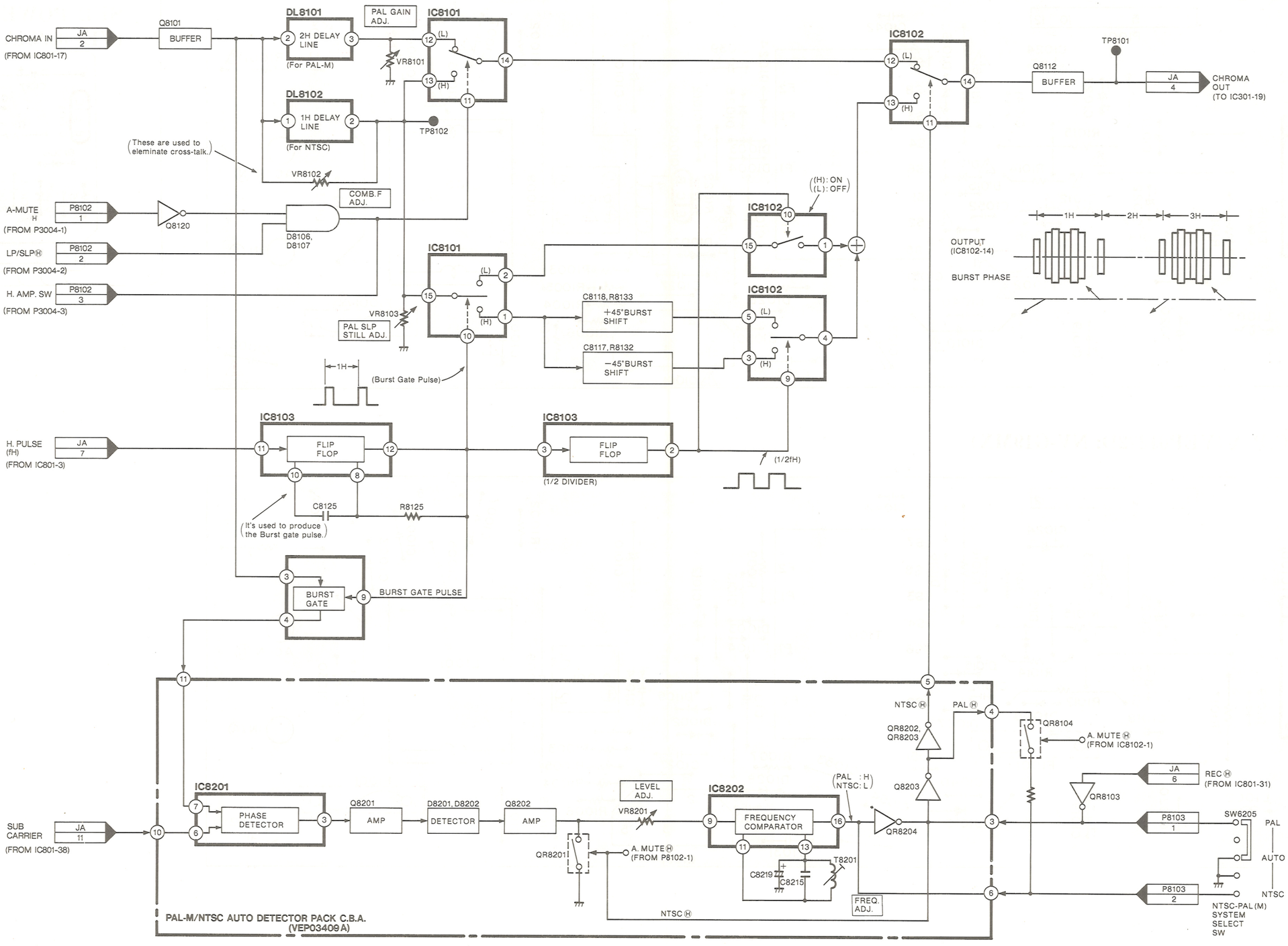

3—5

3-6. POWER C.B.A. (VEP01272A: NV-G21PX/BR, NV-G20PX/PN)

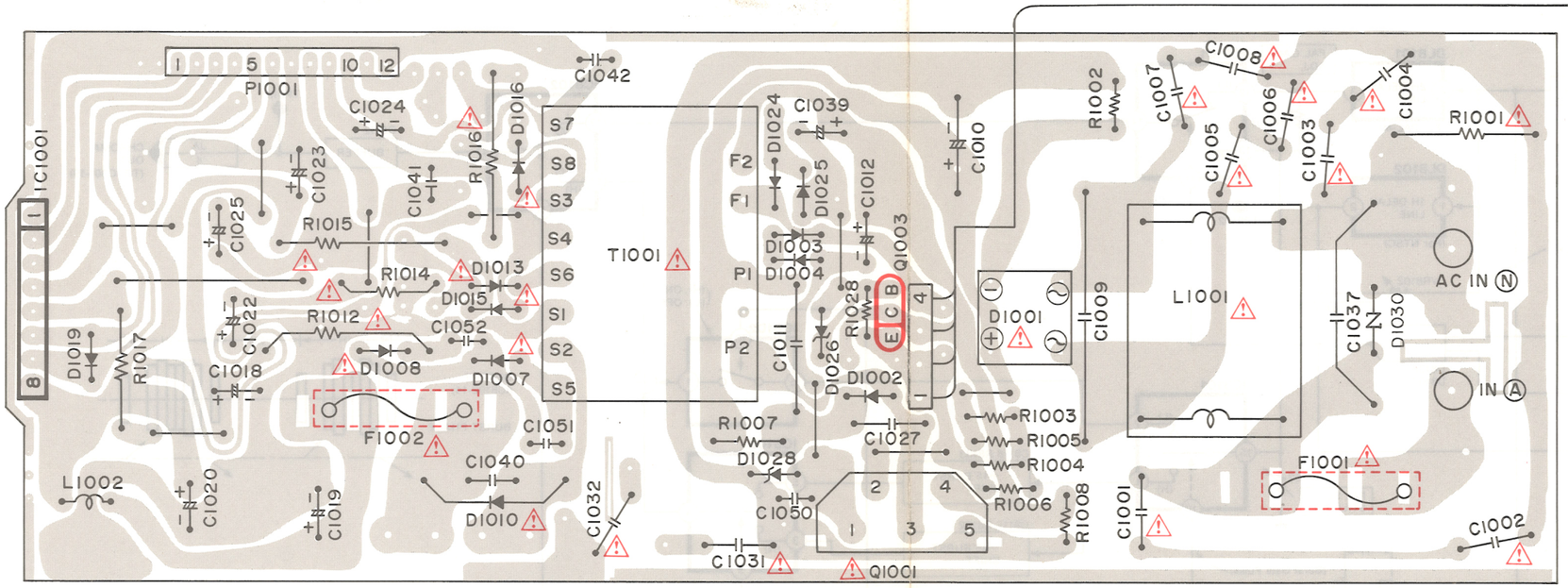

SUB POWER C.B.A. (VEP00J51A)

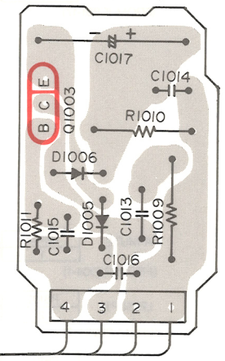

3-7. POWER C.B.A (VEP01272D: NV-G19MX)

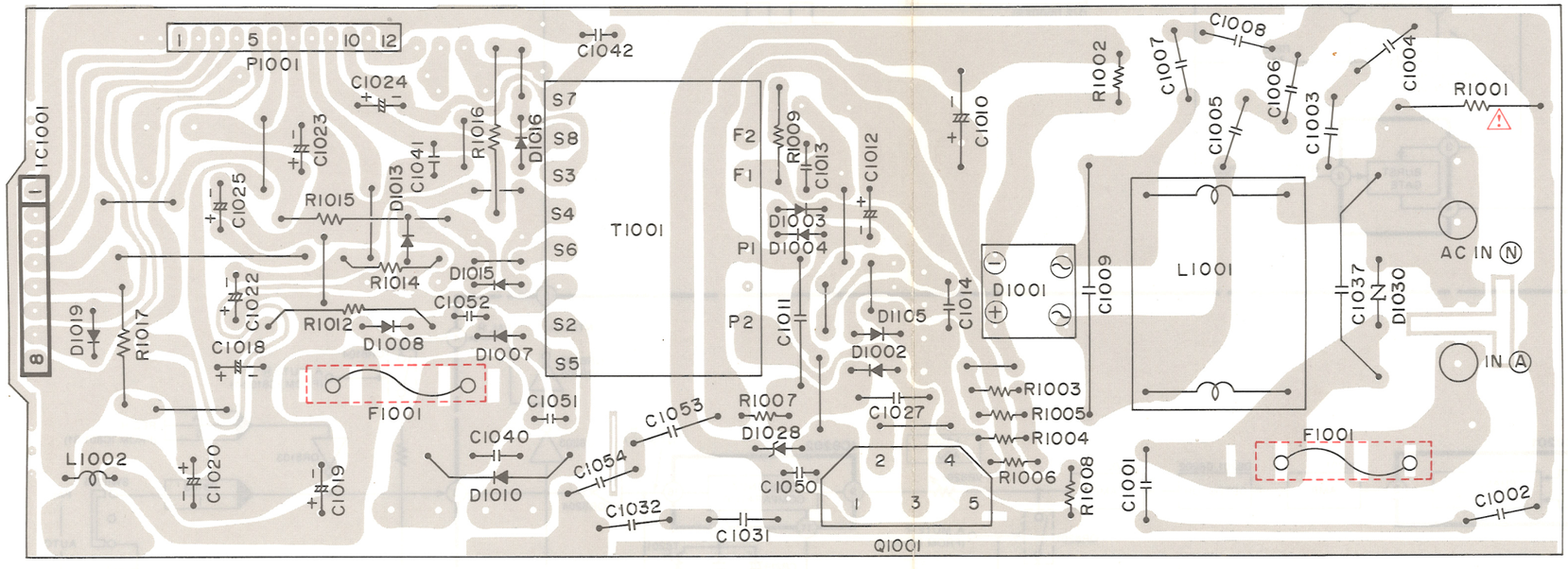

Back Page:
NTSC-PAL(M) Section

3-8. POWER SCHEMATIC DIAGRAM (NV-G21PX/BR, NV-G20PX/PN)

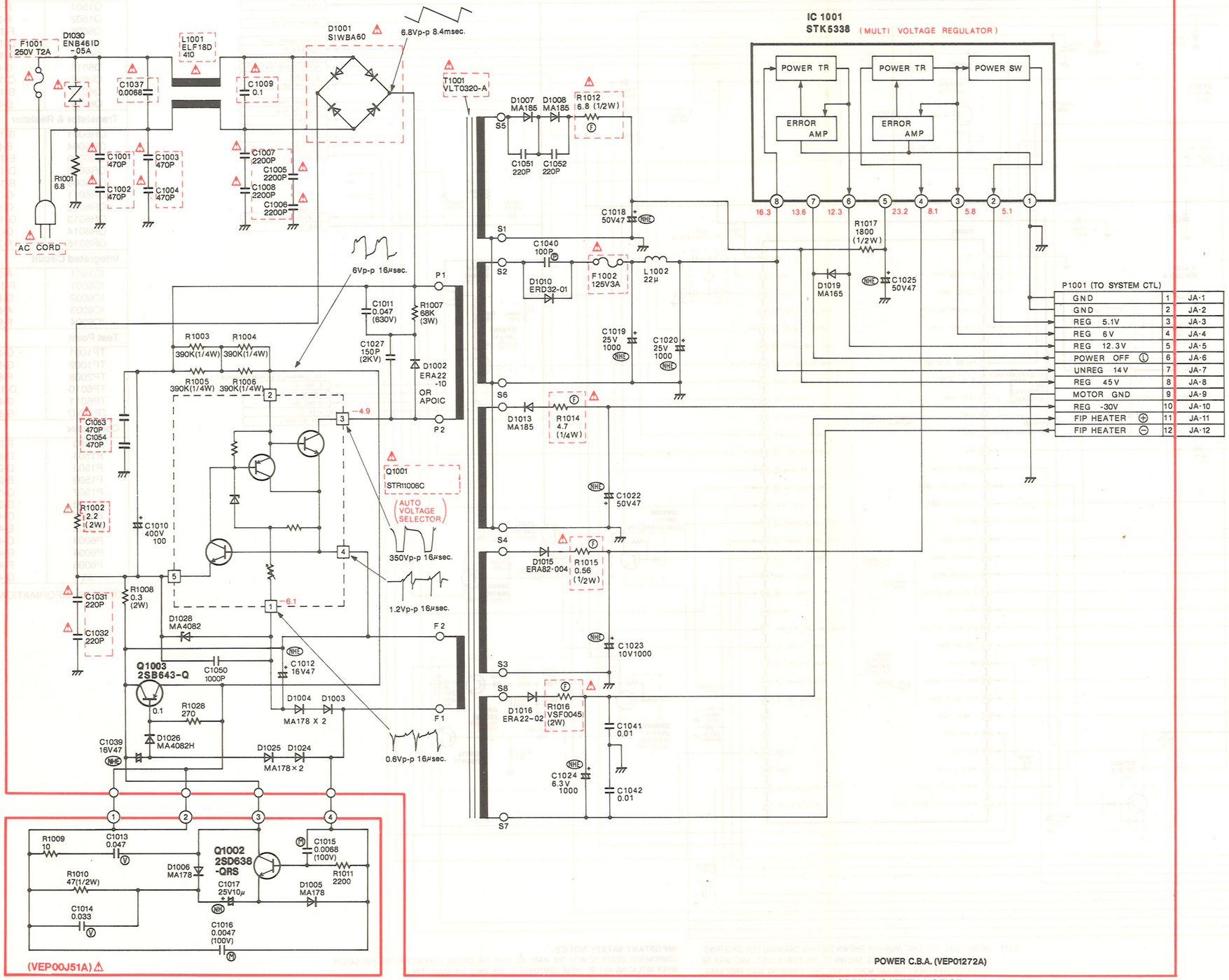

POWER C.B.A. (VEP01272A)

NOTE: THE MEASUREMENT MODE OF THE DC VOLTAGE ON THIS DIAGRAM IS STOP MODE.

NOTE 1. WHEN MEASURE THE VOLTAGE OR WAVEFORM ON THE POWER TRANSFORMER CIRCUIT, SET THE GND TERMINAL OF MEASURING POINT AS FOLLOWS.
(PRIMARY SIDE.....C1010-(···) SIDE
\ SECONDARY SIDE.....TP GND OF MAIN C.B.A.

NOTE 2. THE DC VOLTAGE INDICATED IN PRIMARY SIDE IS SHOWN THE VOLTAGE WHEN INPUT AC IS 120V.

IMPORTANT SAFETY NOTICE:

NOTE: DO NOT USE THE PART NUMBER SHOWN ON THIS DRAWING FOR ORDERING. THE CORRECT PART NUMBER IS SHOWN IN THE PARTS LIST, AND MAY BE SLIGHTLY DIFFERENT OR AMENDED SINCE THIS DRAWING WAS PREPARED.

3-9. POWER SCHEMATIC DIAGRAM (NV

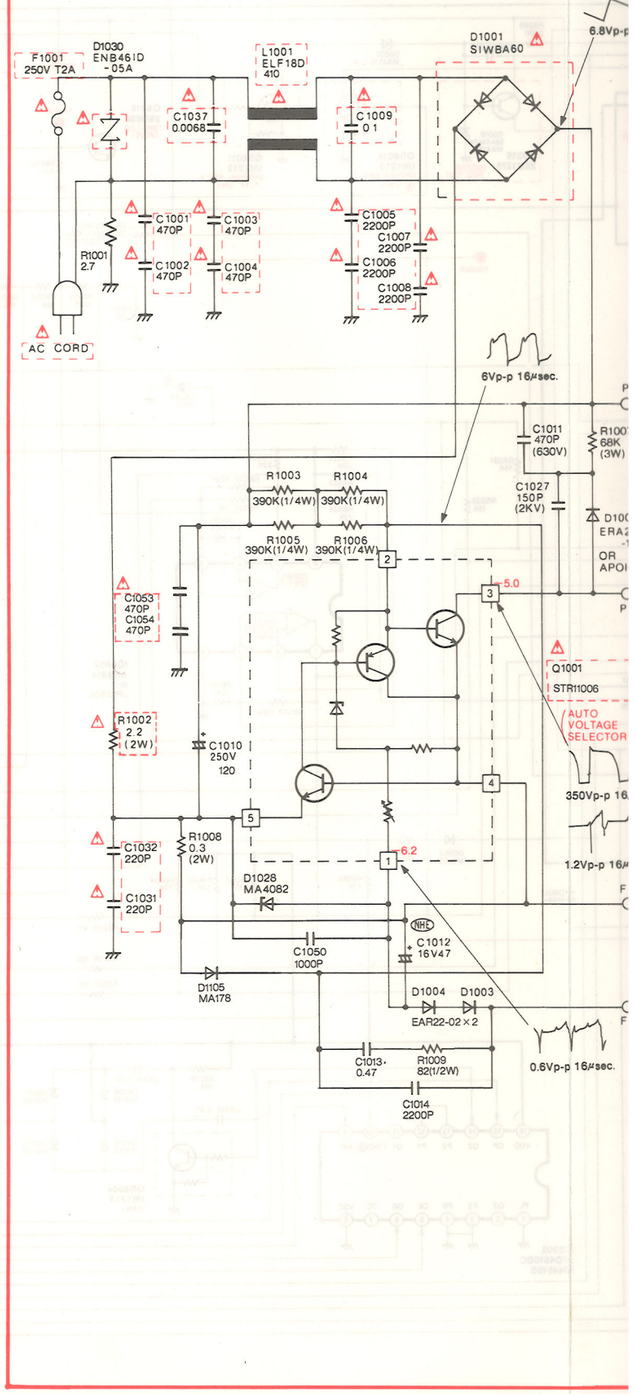

NOTE: THE MEASUREMENT MODE OF THE DC VOLTAGE ON THIS DIAGRAM IS STOP MODE.

NOTE 1.

IMPORTANT SAFETY NOTICE:

NOTE: DO NOT USE THE PART NUMBER SHOWN ON THIS DRAWING FOR ORDERING. THE CORRECT PART NUMBER IS SHOWN IN THE PARTS LIST, AND MAY BE SLIGHTLY DIFFERENT OR AMENDED SINCE THIS DRAWING WAS PREPARED.

NOTE 2.

N)

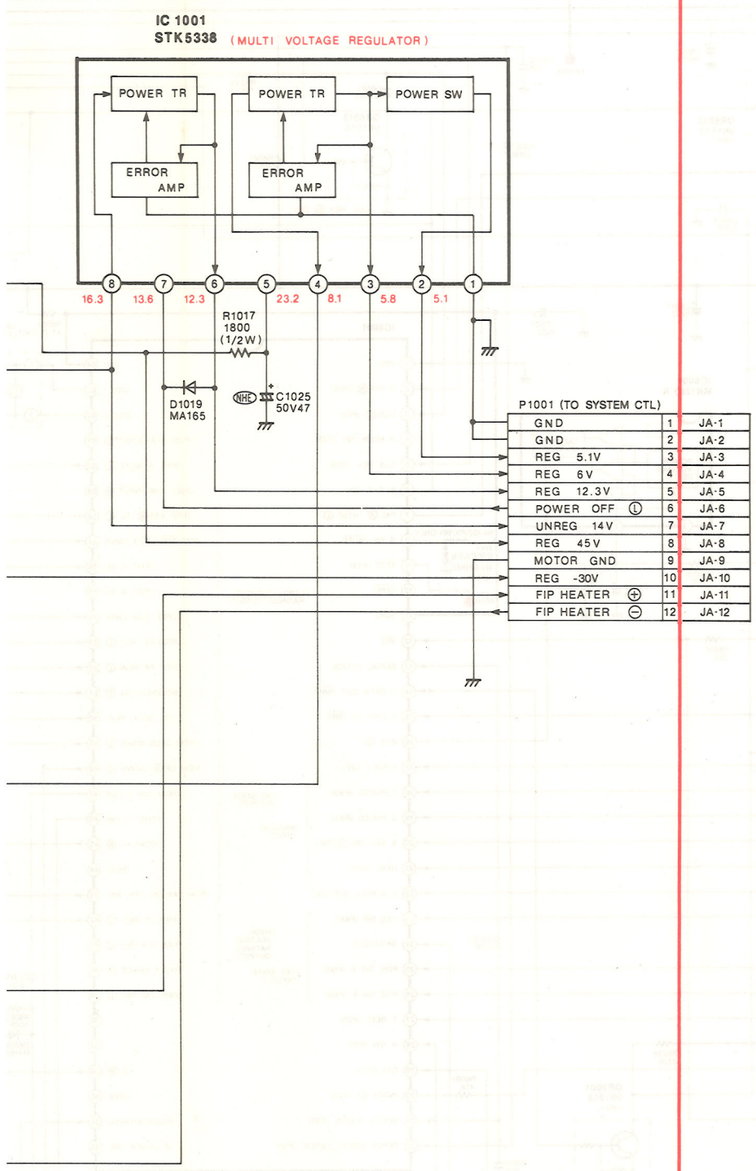

POWER C.B.A. (VEP01272A)

OWER TRANSFORMER
S FOLLOWS.

THE VOLTAGE WHEN

IMPORTANT SAFETY NOTICE:

NOTE: DO NOT USE THE PART NUMBER SHOWN ON THIS DRAWING FOR ORDERING. THE CORRECT PART NUMBER IS SHOWN IN THE PARTS LIST, AND MAY BE SLIGHTLY DIFFERENT OR AMENDED SINCE THIS DRAWING WAS PREPARED.

3-9. POWER SCHEMATIC DIAGRAM (NV-G19MX)

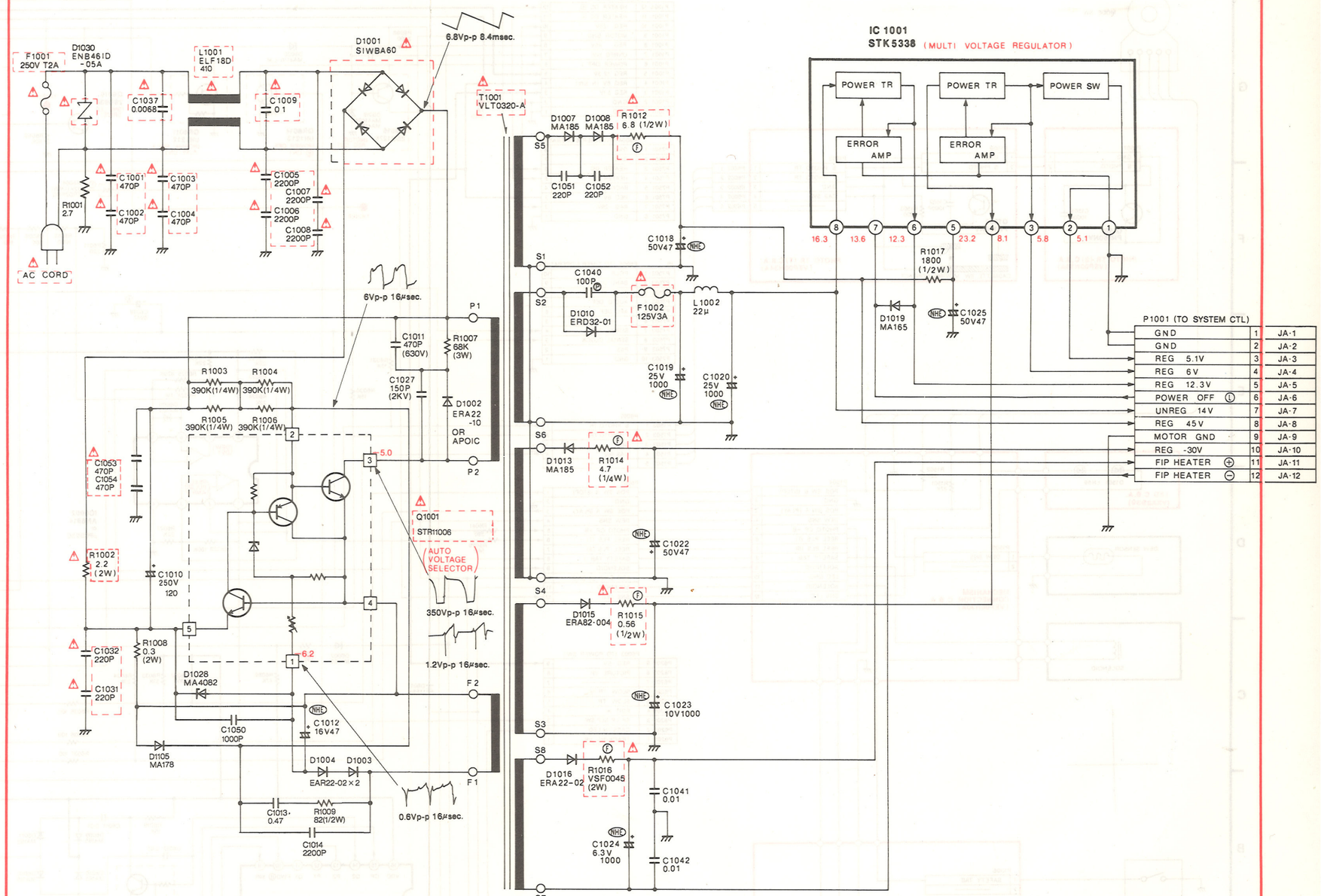

POWER C.B.A. (VEP01272D)

NOTE: THE MEASUREMENT MODE OF THE DC VOLTAGE ON THIS DIAGRAM IS STOP MODE.

IMPORTANT SAFETY NOTICE:

NOTE: DO NOT USE THE PART NUMBER SHOWN ON THIS DRAWING FOR ORDERING. THE CORRECT PART NUMBER IS SHOWN IN THE PARTS LIST, AND MAY BE SLIGHTLY DIFFERENT OR AMENDED SINCE THIS DRAWING WAS PREPARED.

NOTE 1. WHEN MEASURE THE VOLTAGE OR WAVEFORM ON THE POWER TRANSFORMER CIRCUIT, SET THE GND TERMINAL OF MEASURING POINT AS FOLLOWS.
(PRIMARY SIDE.....C1010-(···) SIDE
\ SECONDARY SIDE.....TP GND OF MAIN C.B.A.

NOTE 2. THE DC VOLTAGE INDICATED IN PRIMARY SIDE IS SHOWN THE VOLTAGE WHEN INPUT AC IS 120V.

Next Page:
SYSTEM CONTROL Section

3-10. SYSTEM CONTROL SCHEMATIC DIAGRAM

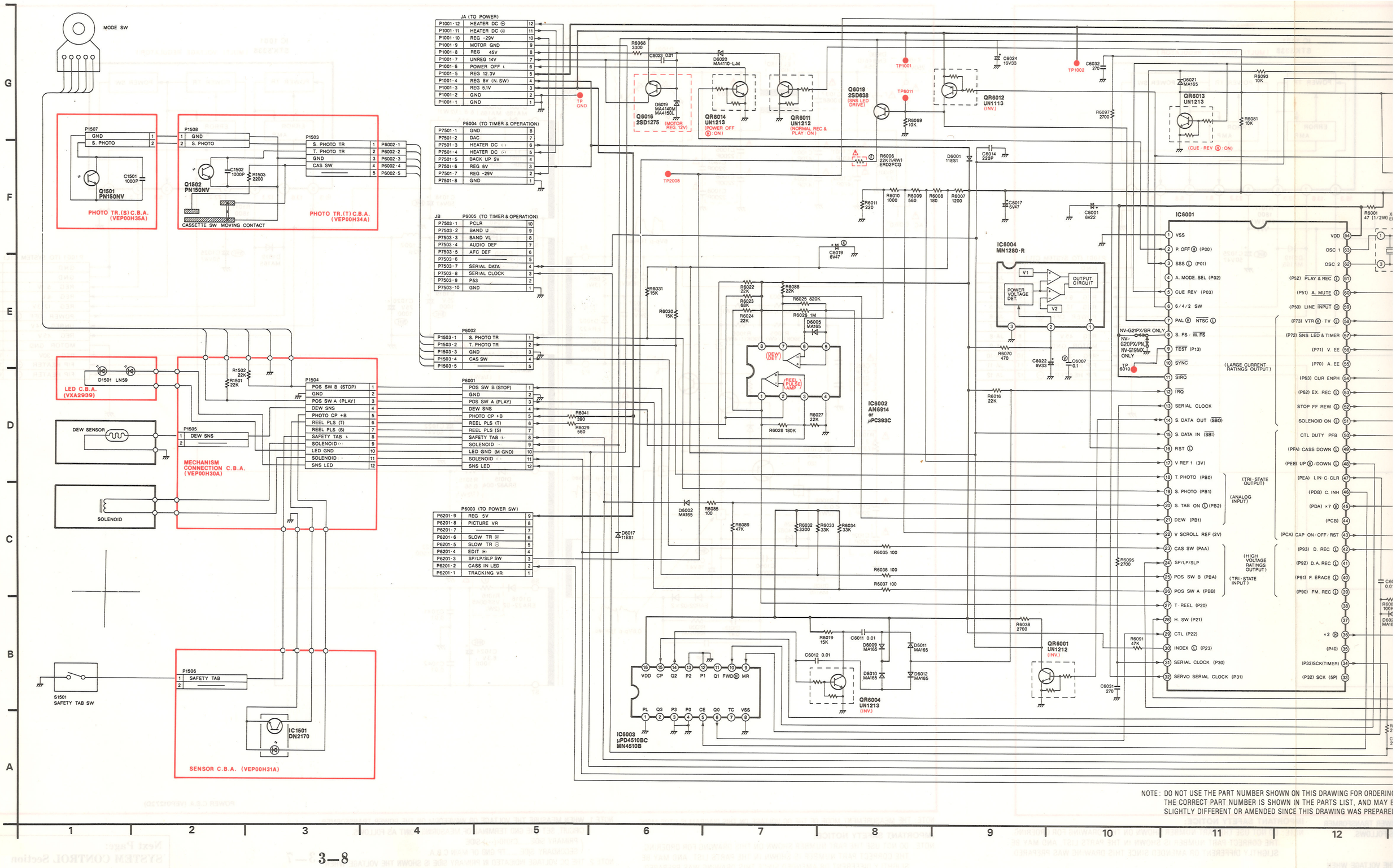

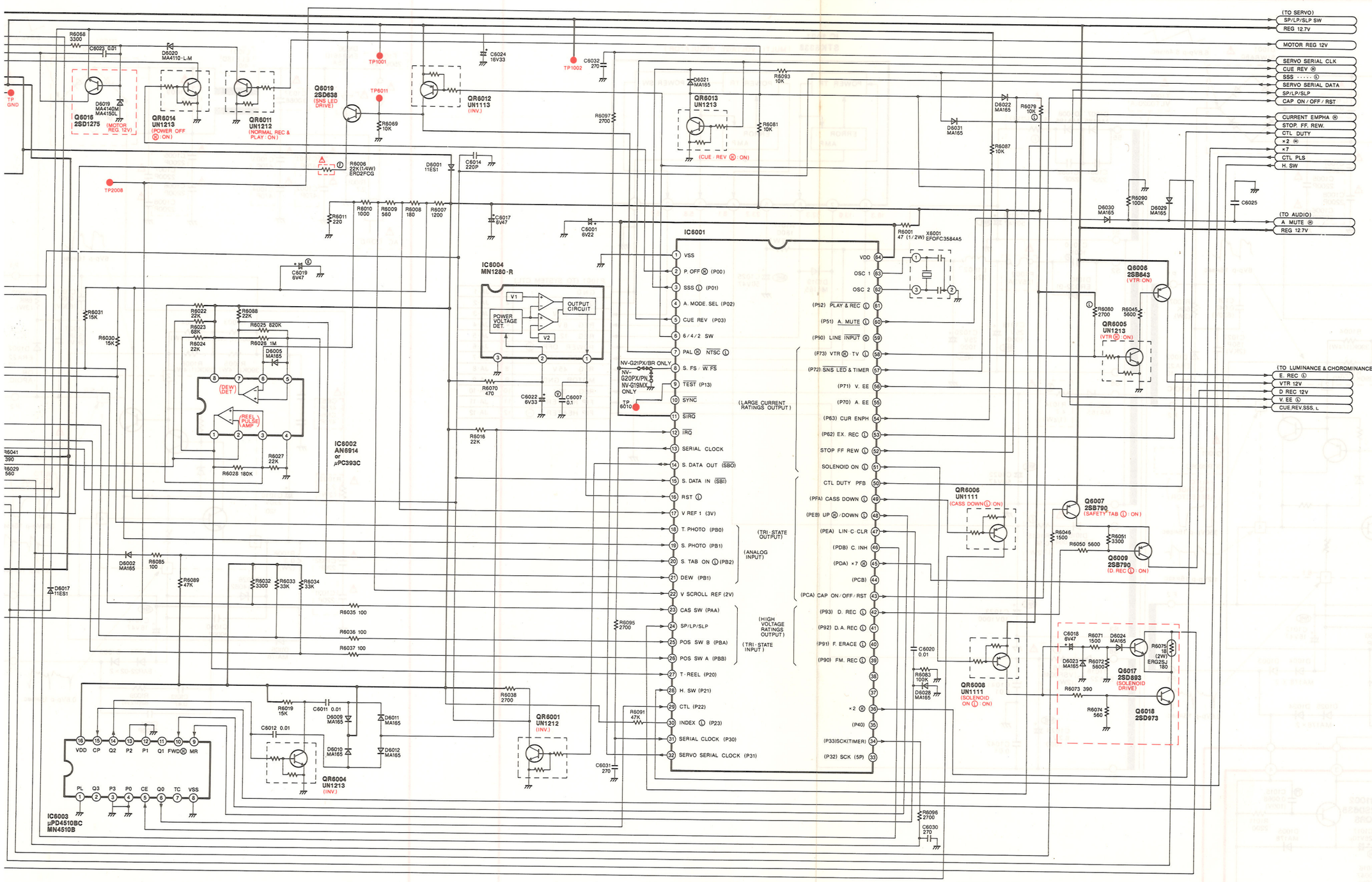

SYSTEM CONTROL SCHEMATIC	
Transistor	
Q1501	F-1
Q1502	F-2
Q6006	F-14
Q6007	D-14
Q6009	C-14
Q6016	G-6
Q6017	C-14
Q6018	B-14
Q6019	G-8
Transistor & Resistor	
QR6001	B-10
QR6004	B-8
QR6005	E-14
QR6006	D-13
QR6008	B-13
QR6011	G-7
QR6012	G-9
QR6013	G-12
QR6014	G-7
QR6016	F-7
Integrated Circuit	
IC1501	A-3
IC6001	F-11
IC6002	D-8
IC6003	A-6
IC6004	F-9
Test Point	
TP1001	G-8
TP1002	G-5
TP2008	F-6
TP6010	D-10
TP6011	G-8
TP GND	G-5
Connector	
P1503	F-3
P1504	D-3
P1505	D-2
P1506	B-2
P1507	G-1
P1508	G-2
P6001	D-4
P6002	E-4
P6003	C-4
P6004	G-4
P6005	F-4
JA	G-4

ADDRESS INFORMATION

NOTE: DO NOT USE THE PART NUMBER SHOWN ON THIS DRAWING FOR ORDERING. THE CORRECT PART NUMBER IS SHOWN IN THE PARTS LIST, AND MAY BE SLIGHTLY DIFFERENT OR AMENDED SINCE THIS DRAWING WAS PREPARED.

IMPORTANT SAFETY NOTICE:
COMPONENTS IDENTIFIED WITH THE MARK ⚠ HAVE THE SPECIAL CHARACTERISTICS FOR SAFETY. WHEN REPLACING ANY OF THESE COMPONENTS, USE ONLY THE SAME TYPE.

SYSTEM CONTROL Section ICs VOLTAGE CHART (SP Mode)

REF. NO.	IC6001																			
MODE	1	2	3	4	5	6	7	8	9	10	11	12	13	14	15	16	17	18	19	20
STOP	0	0	0.1	0	0	4.4	0.6	0	4.9	4.0	4.9	4.9	4.6	0.3	4.7	5.0	2.8	3.1	3.1	5.0
PLAY	0	0	4.9	0	0	4.4	0.6	0	4.9	4.0	4.9	4.9	4.6	0.3	4.7	5.0	2.8	3.1	3.1	5.0
REC	0	0	4.9	0	0	4.4	0.6	0	4.9	3.9	4.9	4.9	4.6	0.3	4.7	5.0	2.8	3.1	3.1	0.5
F.F	0	0	4.8	0	0	4.4	0.6	0	4.9	4.0	4.9	0	4.6	0.3	4.7	5.0	2.8	0	0	0.5
REW	0	0	0	0	0	4.4	0.6	0	4.9	4.0	4.9	4.9	4.6	0.3	4.7	5.0	2.8	3.1	3.1	0.5
REF. NO.	IC6001																			
MODE	21	22	23	24	25	26	27	28	29	30	31	32	33	34	35	36	37	38	39	40
STOP	0	1.9	2.0	0	2.0	5.0	4.7	0	0	5.0	4.6	4.8	4.7	4.7	0	0	4.9	4.9	1.1	1.1
PLAY	0	1.9	2.0	0	5.0	0	4.1	2.5	2.6	5.0	5.0	4.8	4.7	4.7	0	0	4.9	4.9	0.9	0.9
REC	0	1.9	2.0	0	5.0	0	4.4	2.5	2.6	5.0	4.6	4.8	4.7	4.7	4.9	0	4.9	4.9	0	0
F.F	0	1.9	2.0	0	2.0	5.0	2.7	0	5.0	5.0	4.6	4.8	4.7	4.7	0	0	4.9	4.9	1.0	1.0
REW	0	1.9	2.0	0	2.0	5.0	2.7	0	0	5.0	4.6	4.8	4.7	4.7	0	0	4.9	4.9	1.0	1.0
REF. NO.	IC6001																			
MODE	41	42	43	44	45	46	47	48	49	50	51	52	53	54	55	56	57	58	59	60
STOP	1.1	12.1	1.8	0	0.1	4.9	4.9	0	0.1	4.8	5.0	0.1	0.5	0.1	1.1	0.1	4.4	4.7	4.9	0
PLAY	0.9	12.1	4.9	0	0.1	0	4.9	4.9	0.1	4.9	5.0	4.4	0.5	4.8	0	5.1	4.4	4.8	4.9	0
REC	0	0	4.9	0	0.1	0	4.9	4.9	0.1	4.9	4.9	4.4	5.4	4.8	0.4	0.1	4.4	4.7	4.9	0
F.F	1.0	12.2	4.9	0	0.1	0	4.9	4.9	0.1	4.8	5.0	0.1	0.5	0.1	1.2	0.1	4.4	4.7	4.9	0
REW	1.0	12.2	4.9	0	0.1	0.1	0	4.9	0	0.1	4.9	5.0	0.1	0.5	0.1	1.0	4.4	4.7	4.9	0
REF. NO.	IC6001										IC6002									
MODE	61	62	63	64							1	2	3	4	5	6	7	8		
STOP	4.9	2.2	2.2	4.9							4.7	0.3	2.7	0	0	0.4	0	5.0		
PLAY	4.9	2.2	2.2	4.9							4.7	4.3	4.7	0	0	0.4	0	5.0		
REC	4.9	2.2	2.2	4.9							4.3	4.2	2.7	0	0	0.4	0	5.0		
F.F	4.9	2.2	2.2	4.9							2.7	2.0	2.5	0	0	0.4	0	5.0		
REW	4.9	2.2	2.2	4.9							2.7	2.0	2.5	0	0	0.4	0	0.5		
REF. NO.	IC6003																			
MODE	1	2	3	4	5	6	7	8	9	10	11	12	13	14	15	16				
STOP	0	0	0	0	4.9	0	5.0	0	0	0	5.0	0	0	5.0	0.5	5.0				
PLAY	0	2.3	0	0	0	2.4	2.6	5.0	0	4.9	2.1	0	0	3.9	0.4	5.0				
REC	0	2.3	0	0	0.1	2.6	5.0	0	0	4.9	2.1	0	0	4.0	3.1	5.0				
F.F	0	5.0	0	0	0	0	5.0	0	0	4.9	0	0	0	0	0.3	5.0				
REW	0	5.0	0	0	0	5.0	5.0	0	0	0	0	0	0	0	0.3	5.0				
REF. NO.	IC6004																			
MODE	1	2	3																	
STOP	5.0	5.0	0																	
PLAY	5.0	5.0	0																	
REC	5.0	5.0	0																	
F.F	5.0	5.0	0																	
REW	5.0	5.0	0																	

SYSTEM CONTROL Section TRs VOLTAGE CHART (SP Mode)

REF. NO.	Q6006			Q6007			Q6009			Q6016			Q6017			Q6018		
MODE	E	C	B	E	C	B	E	C	B	E	C	B	E	C	B	E	C	B
STOP	12.2	12.0	11.3	12.2	12.1	11.7	12.1	−0.3	12.1	13.9	16.4	15.0	13.8	13.8	5.1	0	13.8	0
PLAY	12.2	12.0	11.4	12.2	12.1	11.7	12.1	−0.3	12.1	10.1	16.0	11.3	10.1	10.1	2.0	0	10.1	0
REC	12.1	12.0	11.3	12.1	12.1	11.4	12.1	12.0	11.3	13.9	16.2	15.1	10.2	10.2	1.5	0	10.2	0
F.F	12.2	12.0	11.3	12.2	12.1	11.7	12.1	−0.3	12.1	13.9	16.2	15.1	13.8	13.8	5.1	0	13.8	0
REW	12.2	12.0	11.3	12.2	12.2	11.4	12.1	−0.3	12.1	10.3	16.0	11.4	13.8	13.8	5.0	0	13.8	0
REF. NO.	Q6019																	
MODE	E	C	B															
STOP	0.7	13.8	0.6															
PLAY	0.7	10.2	0.6															
REC	0.7	10.6	0.6															
F.F	0.7	13.8	0.6															
REW	0.7	13.8	0.6															
REF. NO.	QR6001			QR6004			QR6005			QR6006			QR6008			QR6011		
MODE	E	C	B	E	C	B	E	C	B	E	C	B	E	C	B	E	C	B
STOP	0	4.7	0.3	0	5.0	0	0	0.1	4.7	5.0	4.9	0.1	5.0	0	5.0	0	4.2	0.6
PLAY	0	4.7	0.3	5.0	4.9	0.1	0	0.1	4.7	5.0	4.9	0.1	5.0	0	5.0	0	0.1	3.5
REC	0	4.7	0.3	0	4.6	3.1	0	0.1	4.7	5.0	4.9	0.1	5.0	0	5.0	0	0.1	3.5
F.F	0	4.7	0.3	0	5.0	0	0	0.1	4.7	5.0	4.9	0.1	5.0	0	5.0	0	4.3	0.7
REW	0	4.7	0.3	0	0	5.0	0	0.1	4.7	5.0	4.9	0.1	5.0	0	5.0	0	4.2	0.7
REF. NO.	QR6012			QR6013			QR6014											
MODE	E	C	B	E	C	B	E	C	B									
STOP	5.1	0.6	4.4	0	0.6	0	0	13.5	0									
PLAY	5.1	0.6	4.4	0	3.5	0	0	13.5	0									
REC	5.1	0.6	4.4	0	3.5	0	0	13.5	0									
F.F	5.1	0.6	4.4	0	0.7	0	0	13.5	0									
REW	5.1	0.6	4.4	0	0.7	0	0	13.5	0									

SYSTEM CONTROL Section ICs VOLTAGE CHART (LP Mode)

REF. NO.	IC6001																			
MODE	1	2	3	4	5	6	7	8	9	10	11	12	13	14	15	16	17	18	19	20
STOP	0	0	0	0	0	4.4	0.6	0	4.9	4.0	4.9	4.9	4.6	0.3	4.7	5.0	2.8	3.1	3.1	5.0
PLAY	0	0	4.9	0	0	4.4	0.6	0	4.9	4.0	4.9	4.9	4.6	0.3	4.7	5.0	2.8	3.1	3.1	5.0
REC	0	0	4.9	0	0	4.4	0.6	0	4.9	3.9	4.9	4.9	4.6	0.3	4.7	5.0	2.8	3.1	3.1	0.5
F.F	0	0	4.8	0	0	4.4	0.6	0	4.9	4.0	4.9	4.9	4.6	0.3	4.7	5.0	2.8	3.1	3.1	0.5
REW	0	0	4.8	0	0	4.4	0.6	0	4.9	4.0	4.9	4.9	4.6	0.3	4.7	5.0	2.8	3.1	3.1	0.5
REF. NO.	IC6001																			
MODE	21	22	23	24	25	26	27	28	29	30	31	32	33	34	35	36	37	38	39	40
STOP	0	1.9	2.0	2.2	2.0	5.0	4.7	0	5.0	5.0	4.6	4.8	4.7	4.7	0	0	4.9	4.9	0.8	0.8
PLAY	0	1.9	2.0	0	5.0	0	4.8	2.5	2.6	5.0	4.6	4.8	4.7	4.7	0	0	4.9	4.9	0.9	0.9
REC	0	1.9	2.0	2.2	5.0	0		2.5	2.4	5.0	4.6	4.8	4.7	4.7	4.9	0	4.9	4.9	0	0
F.F	0	1.9	2.0	2.2	2.0	5.0	2.7	0	5.0	5.0	4.6	4.8	4.7	4.7	0	0	4.9	4.9	1.0	1.0
REW	0	1.9	2.0	2.2	2.0	5.0	2.7	0	0	5.0	4.6	4.8	4.7	4.7	0	0	4.9	4.9	0.9	0.9
REF. NO.	IC6001																			
MODE	41	42	43	44	45	46	47	48	49	50	51	52	53	54	55	56	57	58	59	60
STOP	0.8	12.1	1.8	0	0.1	4.9	4.9	0	0.1	4.9	5.0	0.1	0.5	0.1	0.8	0.1	4.4	4.7	4.9	0
PLAY	0.8	12.1	4.9	0	0.1	0	4.9	4.9	0.1	4.9	5.0	4.4	0.5	4.8	0	5.1	4.4	4.7	4.9	0
REC	0	0.2	4.9	0.1	0.1	0.1	4.9	4.9	0.1	4.9	5.0	4.4	5.4	4.8	0.4	0.1	4.4	4.7	4.9	0
F.F	1.0	12.2	4.9	0	0.1	0	4.9	4.9	0.1	4.9	5.0	0.1	0.5	0.1	0.9	0.1	4.4	4.7	4.9	0
REW	1.0	12.2	4.9	0	0.1	0	4.9	0	0.1	4.9	5.0	0.1	0.6	0.1	0.9	0.1	4.4	4.7	4.9	0
REF. NO.	IC6001									IC6002										
MODE	61	62	63	64						1	2	3	4	5	6	7	8			
STOP	4.9	2.2	2.2	4.9						4.7	0.3	2.7	0	0	0.4	0	5.0			
PLAY	4.9	2.2	2.2	4.9						4.5	4.0	2.7	0	0	0.4	0	5.0			
REC	4.9	2.2	2.2	4.9						4.7	4.1	2.7	0	0	0.4	0	5.0			
F.F	4.9	2.2	2.2	4.9						2.7	2.0	2.5	0	0	0.4	0	5.0			
REW	4.9	2.2	2.2	4.9						2.7	2.0	2.5	0	0	0.4	0	5.0			
REF. NO.	IC6003																			
MODE	1	2	3	4	5	6	7	8	9	10	11	12	13	14	15	16				
STOP	0	0	0	0	4.9	5.0	5.0	0	0	0	5.0	0	0	5.0	0.5	5.0				
PLAY	0	1.7	0	0	0	2.5	5.0	0	0	4.9	2.1	0	0	3.4	0.4	5.0				
REC	0	2.3	0	0	0.1	2.6	5.0	0	0	4.9	2.1	0	0	4.0	3.1	5.0				
F.F	0	0	0	0	0	0	5.0	0	0	4.9	0	0	0	0	0.3	5.0				
REW	0	0	0	0	0	0	5.0	0	0	0	5.0	0	0	0	0.3	5.0				
REF. NO.	IC6004																			
MODE	1	2	3																	
STOP	5.0	5.0	0																	
PLAY	5.0	5.0	0																	
REC	5.0	5.0	0																	
F.F	5.0	5.0	0																	
REW	5.0	5.0	0																	

SYSTEM CONTROL Section TRs VOLTAGE CHART (LP Mode)

REF. NO.	Q6006			Q2007			Q6009			Q6016			Q6017			Q6018		
MODE	E	C	B	E	C	B	E	C	B	E	C	B	E	C	B	E	C	B
STOP	12.2	12.0	11.3	12.2	12.1	11.7	12.1	−0.3	12.1	13.9	16.3	15.1	13.9	13.9	5.1	0	13.9	0
PLAY	12.2	12.0	11.4	12.2	12.1	11.7	12.1	−0.3	12.1	10.0	16.0	11.3	10.1	10.1	2.0	0	10.1	0
REC	12.1	12.0	11.3	12.1	12.1	11.4	12.1	12.0	11.3	10.1	16.0	11.3	10.2	10.2	1.5	0	10.2	0
F.F	12.2	12.0	11.3	12.2	12.1	11.7	12.1	−0.3	12.1	14.1	16.2	15.2	13.9	13.9	5.2	0	13.9	0
REW	12.2	12.0	11.3	12.2	12.2	11.5	12.2	−0.3	12.2	14.0	16.2	15.2	13.9	13.9	5.1	0	13.9	0
REF. NO.	Q6019																	
MODE	E	C	B															
STOP	0.7	13.9	0.6															
PLAY	0.7	10.2	0.6															
REC	0.7	10.2	0.6															
F.F	0.7	13.9	0.6															
REW	0.7	13.9	0.6															
REF. NO.	QR6001			QR6004			QR6005			QR6006			QR6008			QR6011		
MODE	E	C	B	E	C	B	E	C	B	E	C	B	E	C	B	E	C	B
STOP	0	4.7	0.3	0	0	5.0	0	0	4.7	5.0	4.9	0.1	5.0	0	5.0	0	4.2	0.6
PLAY	0	4.7	0.3	0	4.3	3.7	0	0.1	4.7	5.0	4.9	0.1	5.0	0	5.0	0	0.1	3.5
REC	0	4.7	0.3	0			0	0.1	4.7	5.0	4.9	0.1	5.0	0	5.0	0	0.1	3.5
F.F	0	4.7	0.3	0	0	5.0	0	0.1	4.7	5.0	4.9	0.1	5.0	0	5.0	0	4.3	0.7
REW	0	4.7	0.3	0	0	5.0	0	0.1	4.7	5.0	4.9	0.1	5.0	0	5.0	0	4.3	0.7
REF. NO.	QR6012			QR6013			QR6014											
MODE	E	C	B	E	C	B	E	C	B									
STOP	5.1	0.6	4.4	0	0.6	0	0	13.5	0									
PLAY	5.1	0.6	4.4	0	3.5	0	0	13.5	0									
REC	5.1	0.6	4.4	0	3.5	0	0	13.5	0									
F.F	5.1	0.6	4.4	0	0.7	0	0	13.5	0									
REW	5.1	0.6	4.4	0	0.7	0	0	13.5	0									

3-11. SYSTEM CONTROL Section In Main C.B.A

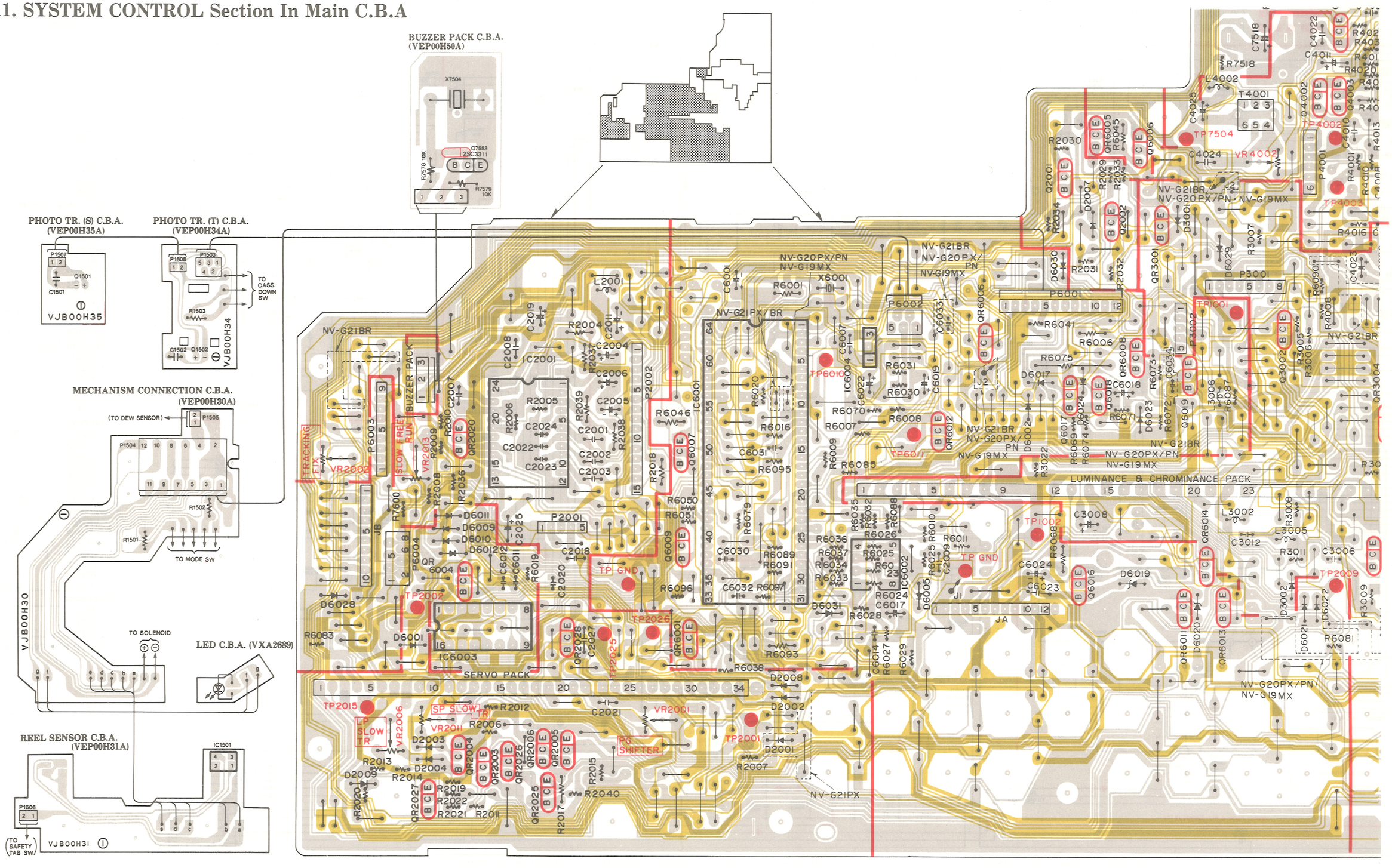

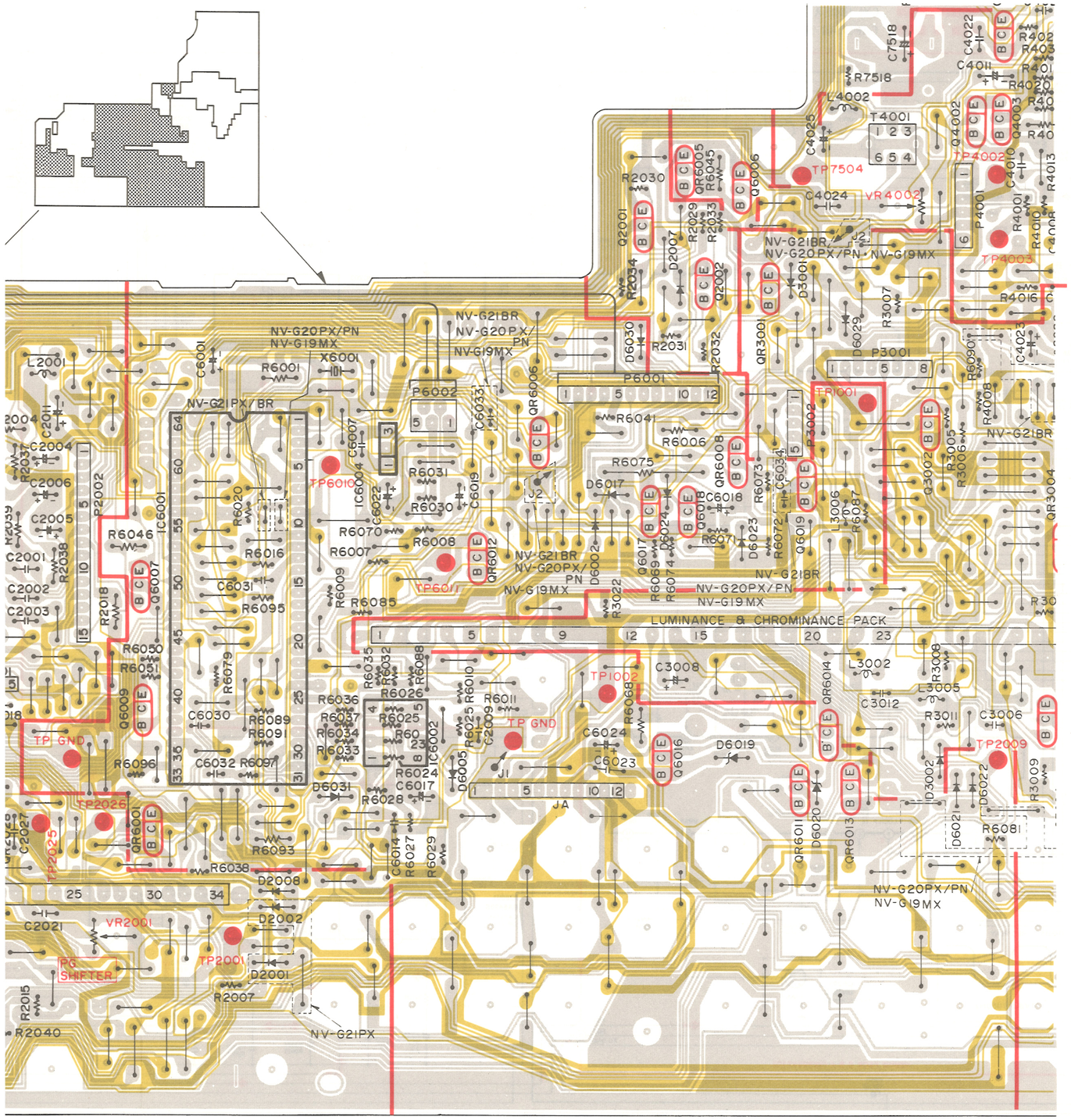

SYSTEM CONTROL Section ICs VOLTAGE CHART (SLP Mode)

REF. NO.	IC6001																		
MODE	1	2	3	4	5	6	7	8	9	10	11	12	13	14	15	16	17	18	19	20
STOP	0	0	0	0	0	4.4	0.6	0	4.9	4.0	4.9	4.9	4.6	0.3	4.7	5.0	2.8	3.1	3.1	5.0
PLAY	0	0	4.9	0	0	4.4	0.6	0	4.9	4.0	4.9	4.9	4.6	0.3	4.7	5.0	2.8	3.1	3.1	5.0
REC	0	0	4.9	0	0	4.4	0.6	0	4.9	3.9	4.9	4.9	4.6	0.3	4.7	5.0	2.8	3.1	3.1	0.5
F.F	0	0	4.8	0	0	4.4	0.6	0	4.9	4.0	4.9	4.9	4.6	0.3	4.7	5.0	2.8	3.1	3.1	0.5
REW	0	0	4.8	0	0	4.4	0.6	0	4.9	4.0	4.9	4.9	4.6	0.3	4.7	5.0	2.8	3.1	3.1	0.5
REF. NO.	IC6001																			
MODE	21	22	23	24	25	26	27	28	29	30	31	32	33	34	35	36	37	38	39	40
STOP	0	1.9	2.0	5.1	2.0	5.0	4.7	0	5.6	5.0	4.6	4.8	4.7	4.7	0	0	4.9	4.9	0.8	0.8
PLAY	0	1.9	2.0	0	5.0	0	4.7	2.5	2.6	5.0	4.6	4.8	4.7	4.7	0	0	4.9	4.9	0.8	0.8
REC	0	1.9	2.0	5.1	5.0	0	4.7	2.5	2.6	5.0	0	4.8	4.7	4.7	4.9	0	4.9	4.9	0.1	0.1
F.F	0	1.9	2.0	5.1	2.0	5.0	2.7	0	0	5.0	4.6	4.8	4.7	4.7	0	0	4.9	4.9	0.9	0.9
REW	0	1.9	2.0	5.1	2.0	5.0	2.7	0	0	5.0	4.6	4.8	4.7	4.7	0	0	4.9	4.9	0.9	0.9
REF. NO.	IC6001																			
MODE	41	42	43	44	45	46	47	48	49	50	51	52	53	54	55	56	57	58	59	60
STOP	0.8	12.1	1.8	0	0.1	4.9	4.9	0	0.1	4.9	5.0	0.1	0.5	0.1	0.9	0.1	4.4	4.7	4.9	0
PLAY	0.8	12.1	4.9	0	0.1	0	4.9	4.9	0.1	4.9	5.0	4.4	0.5	4.8	0	5.1	4.4	4.7	4.9	0
REC	0.1	0.2	4.9	0.1	0.1	0.1	4.9	4.9	0.1	4.9	5.0	4.4	4.4	4.8	0.5	0	4.4	4.7	4.9	0
F.F	0.9	12.2	4.9	0	0.1	0	4.9	4.9	0.1	4.9	5.0	0.1	0.5	0.1	1.0	0.1	4.4	4.7	4.9	0
REW	0.9	12.2	4.9	0	0.1	0	4.9	0	0.1	4.8	5.0	0.1	0.5	0.1	1.0	0.1	4.4	4.7	4.9	0
REF. NO.	IC6001										IC6002									
MODE	61	62	63	64							1	2	3	4	5	6	7	8		
STOP	4.9	2.2	2.2	4.9							4.7	0.3	2.7	0	0	0.4	0	5.0		
PLAY	4.9	2.2	2.2	4.9							4.7	4.2	2.7	0	0	0.4	0	5.0		
REC	0	0.2	2.2	4.9							4.7	4.1	2.4	0	0	0.4	0	5.0		
F.F	4.9	2.2	2.2	4.9							2.7	2.0	2.5	0	0	0.4	0	5.0		
REW	4.9	2.2	2.2	4.9							2.7	2.0	2.5	0	0	0.4	0	5.0		
REF. NO.	IC6003																			
MODE	1	2	3	4	5	6	7	8	9	10	11	12	13	14	15	16				
STOP	0	0	0	0	4.9	5.0	5.0	0	0	0	0	0	0	0	0.5	5.0				
PLAY	0	2.5	0	0	0	2.6	5.0	0	0	4.9	2.5	0	0	3.2	0.4	5.0				
REC	0	2.3	0	0	0.1	2.6	4.9	0	0	4.9	2.5	0	0	4.0	3.1	5.0				
F.F	0	0	0	0	0	5.0	5.0	0	0	4.9	5.0	0	0	5.0	0.3	5.0				
REW	0	0	0	0	0	0	5.0	0	0	0	5.0	0	0	0	0.3	5.0				
REF. NO.	IC6004																			
MODE	1	2	3																	
STOP	5.0	5.0	0																	
PLAY	5.0	5.0	0																	
REC	5.0	5.0	0																	
F.F	5.0	5.0	0																	
REW	5.0	5.0	0																	

SYSTEM CONTROL Section TRs VOLTAGE CHART (SLP Mode)

REF. NO.	Q6006			Q6009			Q6016			Q6017			Q6018			Q6019		
MODE	E	C	B	E	C	B	E	C	B	E	C	B	E	C	B	E	C	B
STOP	12.2	12.0	11.3	12.1	−0.2	12.1	13.9	16.3	15.1	13.9	13.9	5.1	0	13.8	0	0.7	13.9	0.6
PLAY	12.2	12.0	11.3	12.1	−0.3	12.1	10.1	16.0	11.3	10.2	10.2	2.0	0	10.2	0	0.7	10.2	0.6
REC	12.1	12.0	11.3	12.1	12.0	11.3	10.2	16.0	11.4	10.2	10.2	2.5	0	10.2	0	0.7	10.2	0.6
F.F	12.2	12.0	11.3	12.2	−0.3	12.2	13.7	16.3	15.0	13.9	13.7	5.0	0	16.0	0	0.7	13.7	0.6
REW	12.2	12.0	11.3	12.2	−0.3	12.2	13.7	16.3	15.0	13.7	13.7	5.0	0	13.7	0	0.7	13.7	0.6
REF. NO.	QR6001			QR6004			QR6005			QR6006			QR6008			QR6011		
MODE	E	C	B	E	C	B	E	C	B	E	C	B	E	C	B	E	C	B
STOP	0	4.7	0.3	0	5.0	0	0	0.1	4.7	5.0	4.9	0.1	5.0	0	5.0	0	4.2	0.6
PLAY	0	4.7	0.3	0	4.5	3.7	0	0.1	4.7	5.0	4.9	0.1	5.0	0	5.0	0	0.1	3.5
REC	0	4.7	0.3	0	4.5	2.1	0	0.1	4.7	5.0	4.9	0.1	5.0	0	5.0	0	0.1	3.5
F.F	0	4.7	0.3	0	5.0	0	0	0.1	4.7	5.0	4.9	0.1	5.0	0	5.0	0	4.2	0.7
REW	0	4.7	0.3	0	5.0	0	0	0.1	4.7	5.0	4.9	0.1	5.0	0	5.0	0	4.2	0.7
REF. NO.	QR6012			QR6013			QR6014											
MODE	E	C	B	E	C	B	E	C	B									
STOP	5.1	0.6	4.4	0	0.6	0	0	13.5	0									
PLAY	5.1	0.6	4.4	0	3.5	0	0	13.5	0									
REC	5.1	0.6	4.4	0	3.5	0	0	13.5	0									
F.F	5.1	0.6	4.4	0	0.7	0	0	13.5	0									
REW	5.1	0.6	4.4	0	0.7	0	0	13.5	0									

Next Page:
SERVO Section

3-12. SERVO SCHEMATIC DIAGRAM (NV-G21PX/BR)

CYLINDER SERVO SPEED LOOP
CAPSTAN SERVO SPEED LOOP
CYLINDER SERVO PHASE LOOP
CAPSTAN SERVO PHASE LOOP

SUB SERVO (2) PACK C.B.A. (VEP02272A)

SERVO PACK C.B.A.(VEP02271C)

SUB SERVO (1) PACK C.B.A. (VEP02270A)

IC201 μPD6160 CA509

IC202 MN15311VJH

IC203 AN6562 (CAPSTAN ERR AMP) (CYLINDER ERR AMP)

IC2001 BA6430S (CAPSTAN DRIVE)

IC2702 μPC358C OR AN6562

NOTE: DO NOT USE THE PART NUMBER SHOWN ON THIS DRAWING FOR ORDERING. THE CORRECT PART NUMBER IS SHOWN IN THE PARTS LIST, AND MAY BE SLIGHTLY DIFFERENT OR AMENDED SINCE THIS DRAWING WAS PREPARED.

NOTE: THE MEASUREMENT MODE OF THE DC VOLTAGE IN THE BRACKETS (WITH NTSC COLOR SIGNAL (SP MODE). THE MEASUREMENT MODE OF THE DC VOLTAGE OUT OF THE BRACKETS WITH NTSC COLOR SIGNAL (SP MODE).

CYLINDER SERVO SPEED LOOP
CAPSTAN SERVO SPEED LOOP
CYLINDER SERVO PHASE LOOP
CAPSTAN SERVO PHASE LOOP

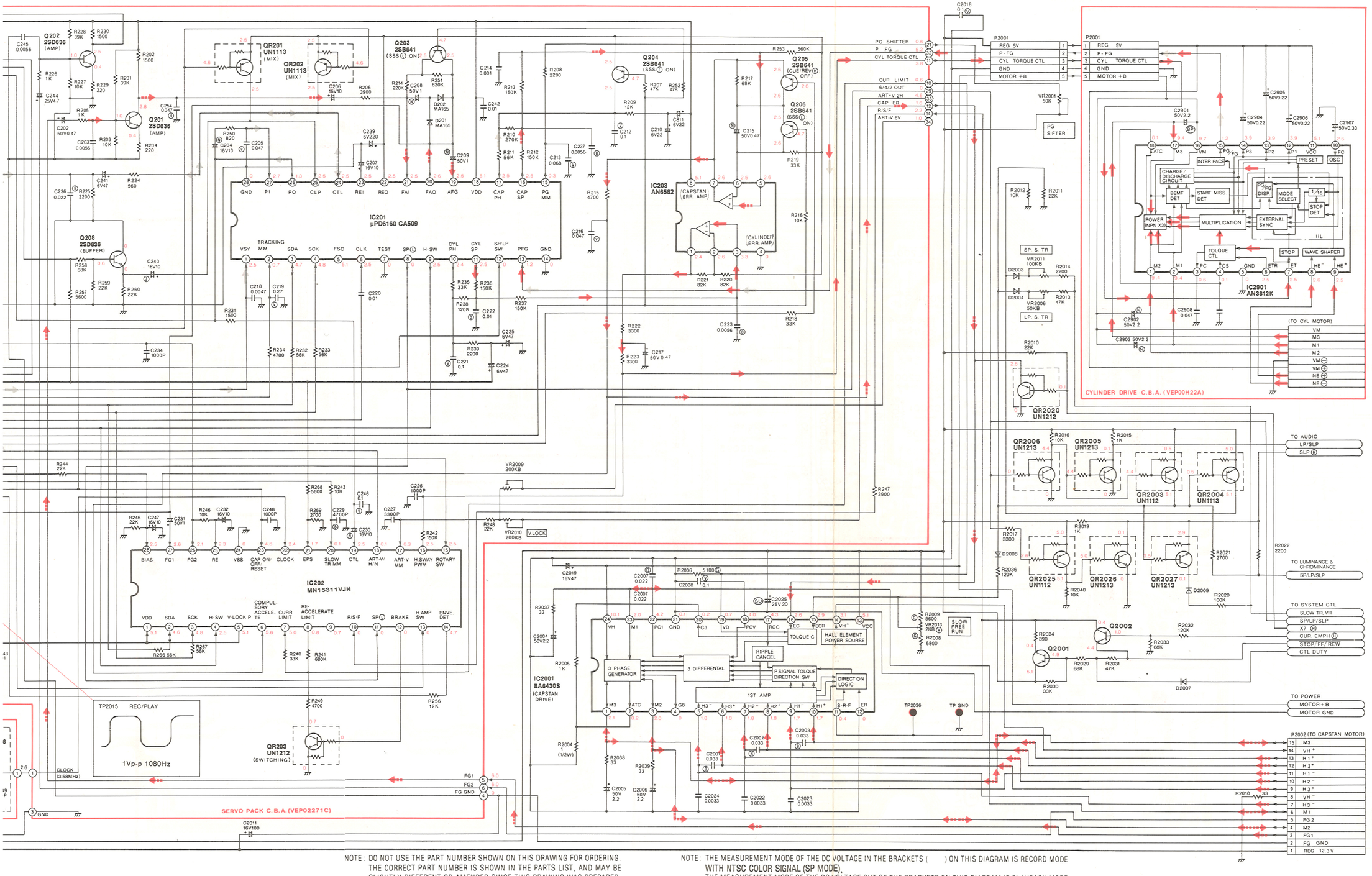

NOTE: DO NOT USE THE PART NUMBER SHOWN ON THIS DRAWING FOR ORDERING. THE CORRECT PART NUMBER IS SHOWN IN THE PARTS LIST, AND MAY BE SLIGHTLY DIFFERENT OR AMENDED SINCE THIS DRAWING WAS PREPARED.

NOTE: THE MEASUREMENT MODE OF THE DC VOLTAGE IN THE BRACKETS ( ) ON THIS DIAGRAM IS RECORD MODE WITH NTSC COLOR SIGNAL (SP MODE).
THE MEASUREMENT MODE OF THE DC VOLTAGE OUT OF THE BRACKETS ON THIS DIAGRAM IS PLAYBACK MODE WITH NTSC COLOR SIGNAL (SP MODE).

5 6 7 8 9 10 11 12 13 14 15

SERVO SCHEMATIC (NV-G21PX/BR)

Transistor	
Q201	G-6
Q202	G-5
Q203	G-8
Q204	G-10
Q205	G-11
Q206	G-11
Q207	B-4
Q208	F-5
Q271	G-2
Q272	G-2
Q273	G-1
Q274	G-1
Q2001	C-13
Q2002	C-14
Transistor & Resistor	
QR201	G-7
QR202	G-7
QR203	B-7
QR2003	D-14
QR2004	D-14
QR2005	D-13
QR2006	D-13
QR2020	D-13
QR2025	C-13
QR2026	C-14
QR2027	C-14
QR2028	A-2
Integrated Circuit	
IC201	F-8
IC202	C-7
IC203	F-10
IC2001	B-9
IC2702	F-1
IC2901	E-15
Test Point	
TP2001	D-2
TP2002	E-2
TP2009	E-2
TP2015	D-3
TP2025	A-3
TP2026	B-12
TP GND	B-12
Adjustment	
VR2001	G-13
VR2002	B-3
VR2006	E-13
VR2009	D-9
VR2010	C-9
VR2011	F-13
VR2013	C-12
Connector	
P2001	G-13
P2001	G-14
P2002	B-15

ADDRESS INFORMATION

3-14. SERVO PACK C.B.A. (VEP02271C

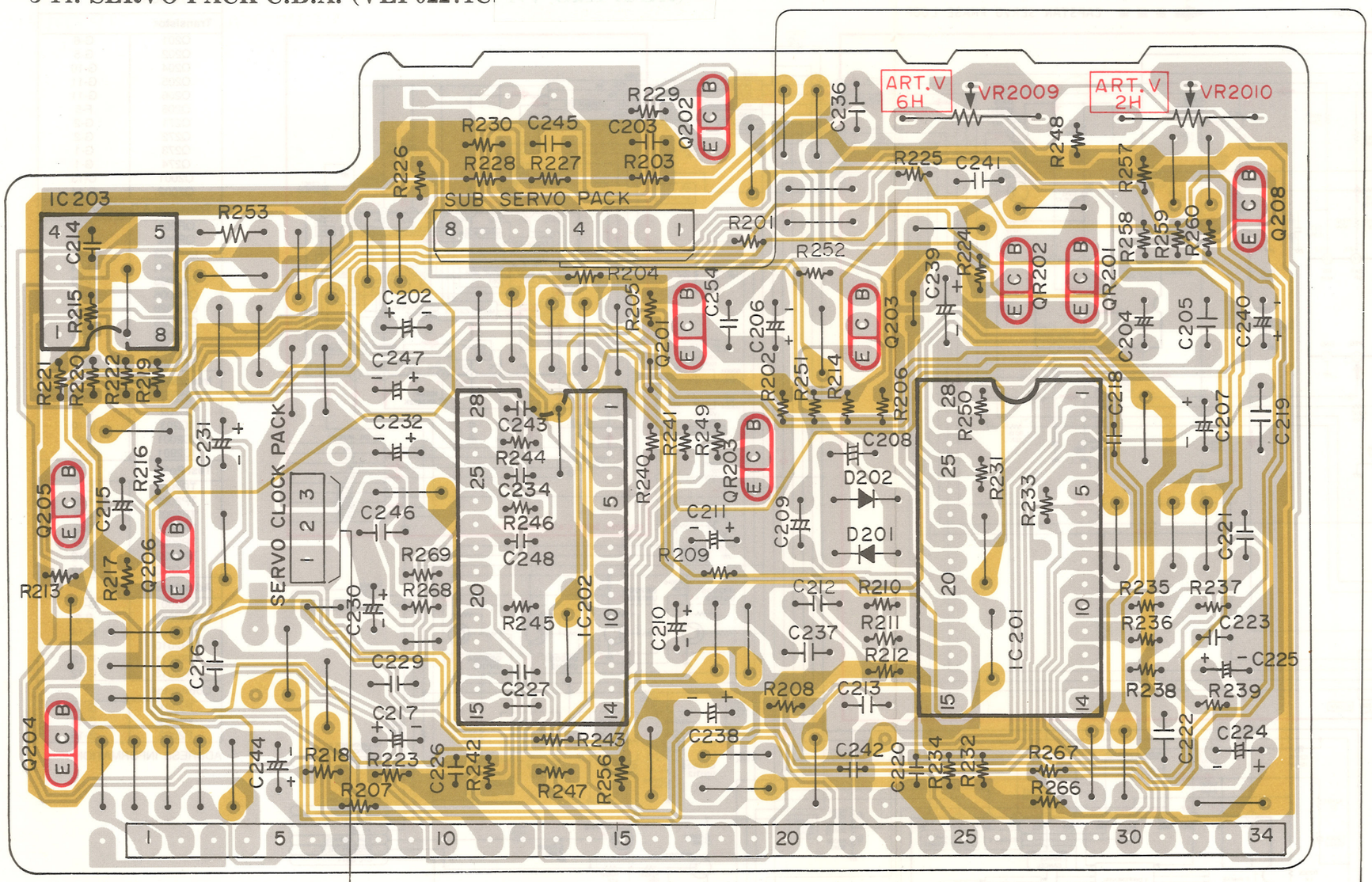

3-15. SUB SERVO (1) PACK C.B.A. (VEP02270A

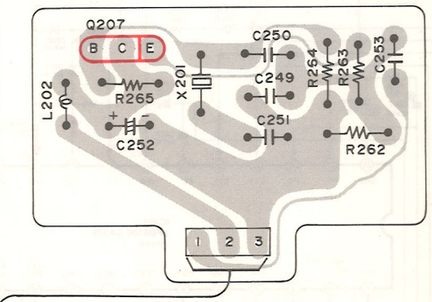

3-16. SUB SERVO (2) PACK C

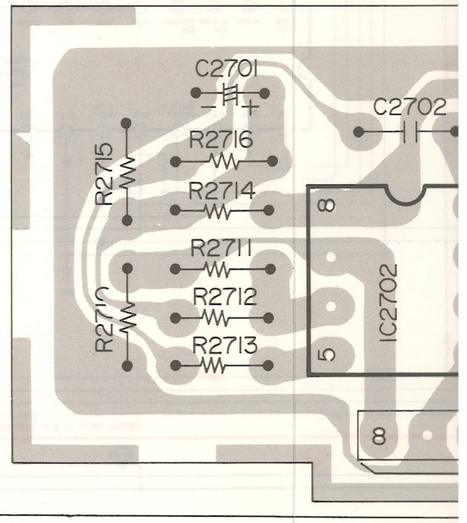

3-15. SUB SERVO (1) PACK C.B.A. (VEP02270A

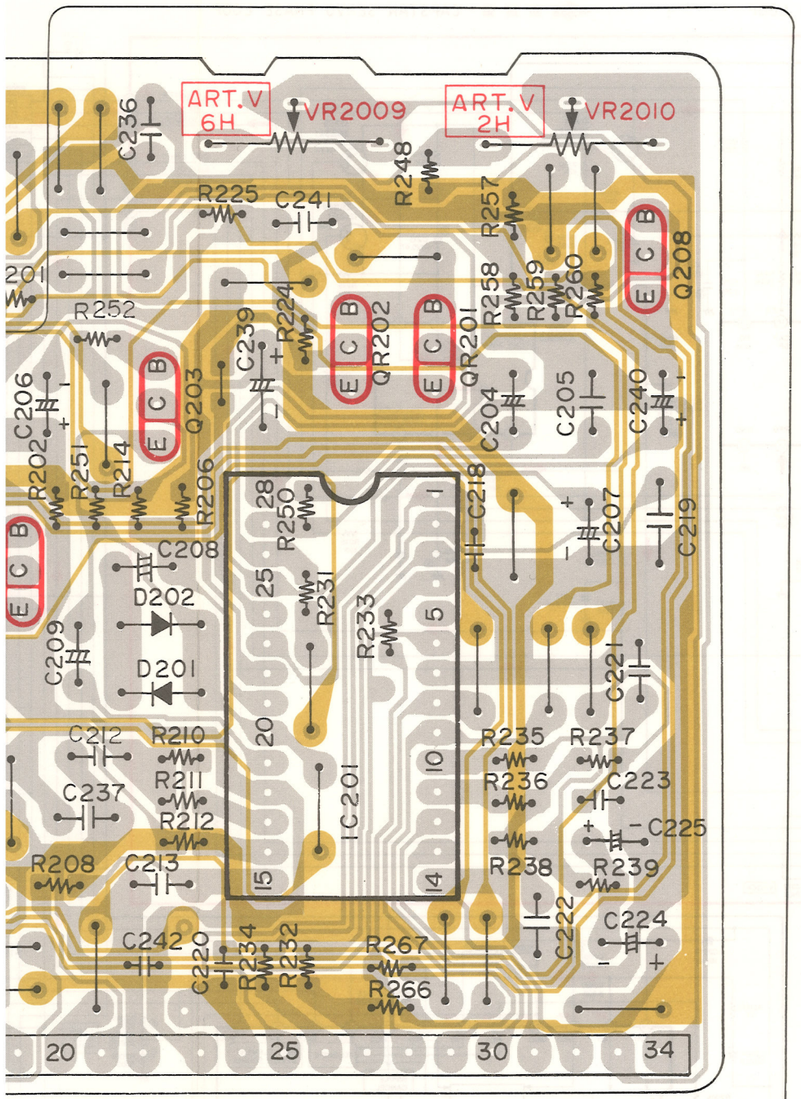

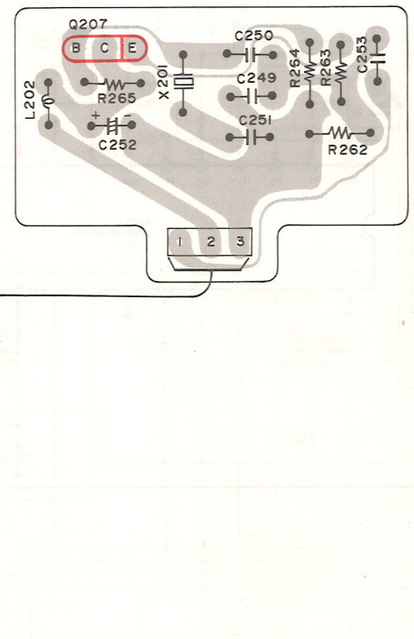

3-16. SUB SERVO (2) PACK C.B.A. (VEP02272A: NV-G21PX/BR)

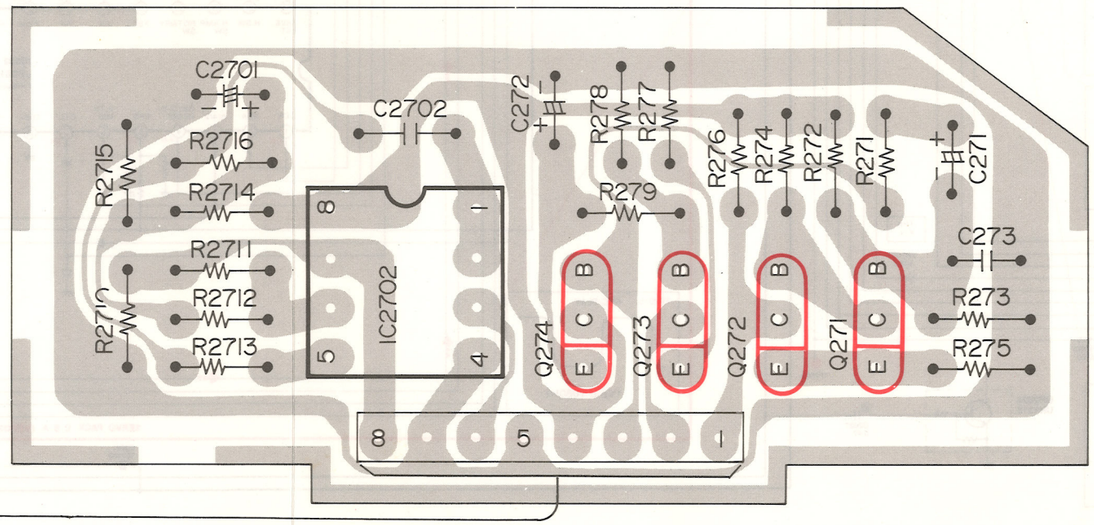

3-17. CYLINDER DRIVE C.B.A. (VEP00H22A: NV-G21PX/BR)

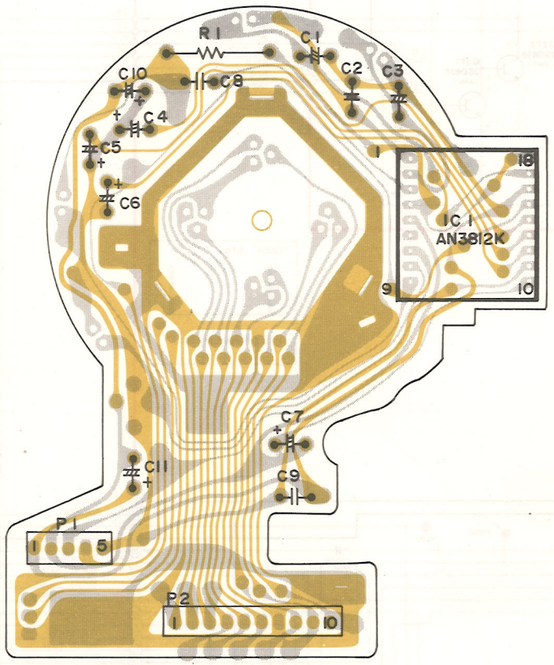

REF. NO. 2900 SERIES

Next Page:
SERVO Section

3-18. SERVO SCHEMATIC DIAGRAM (NV-G20PX/PN, NV-G19MX)

CYLINDER SERVO SPEED LOOP
CAPSTAN SERVO SPEED LOOP
CYLINDER SERVO PHASE LOOP
CAPSTAN SERVO PHASE LOOP

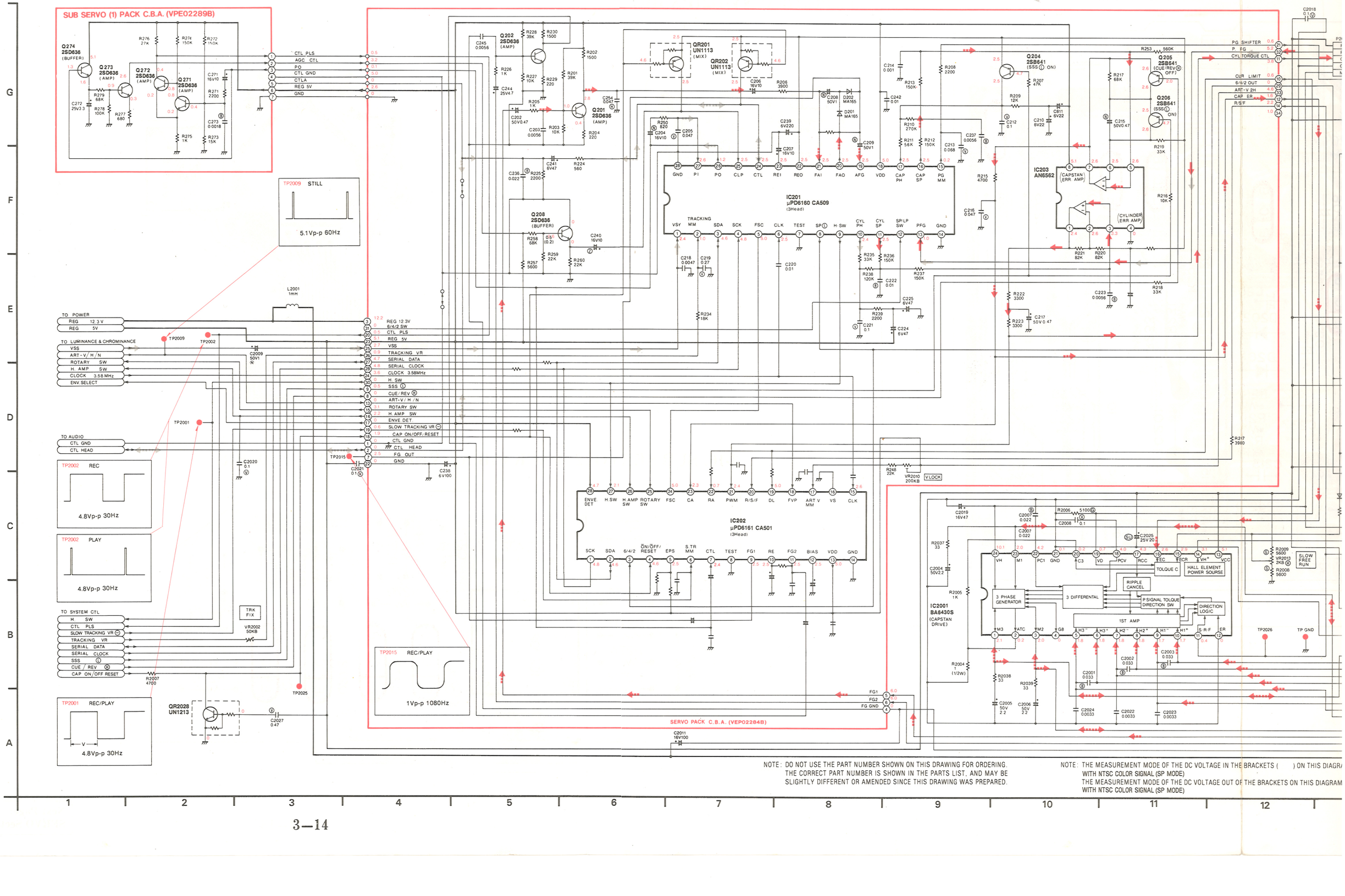

NOTE: DO NOT USE THE PART NUMBER SHOWN ON THIS DRAWING FOR ORDERING. THE CORRECT PART NUMBER IS SHOWN IN THE PARTS LIST, AND MAY BE SLIGHTLY DIFFERENT OR AMENDED SINCE THIS DRAWING WAS PREPARED.

NOTE: THE MEASUREMENT MODE OF THE DC VOLTAGE IN THE BRACKETS ( ) ON THIS DIAGRAM WITH NTSC COLOR SIGNAL (SP MODE)
THE MEASUREMENT MODE OF THE DC VOLTAGE OUT OF THE BRACKETS ON THIS DIAGRAM WITH NTSC COLOR SIGNAL (SP MODE)

(G19MX)

CYLINDER SERVO SPEED LOOP
CAPSTAN SERVO SPEED LOOP
CYLINDER SERVO PHASE LOOP
CAPSTAN SERVO PHASE LOOP

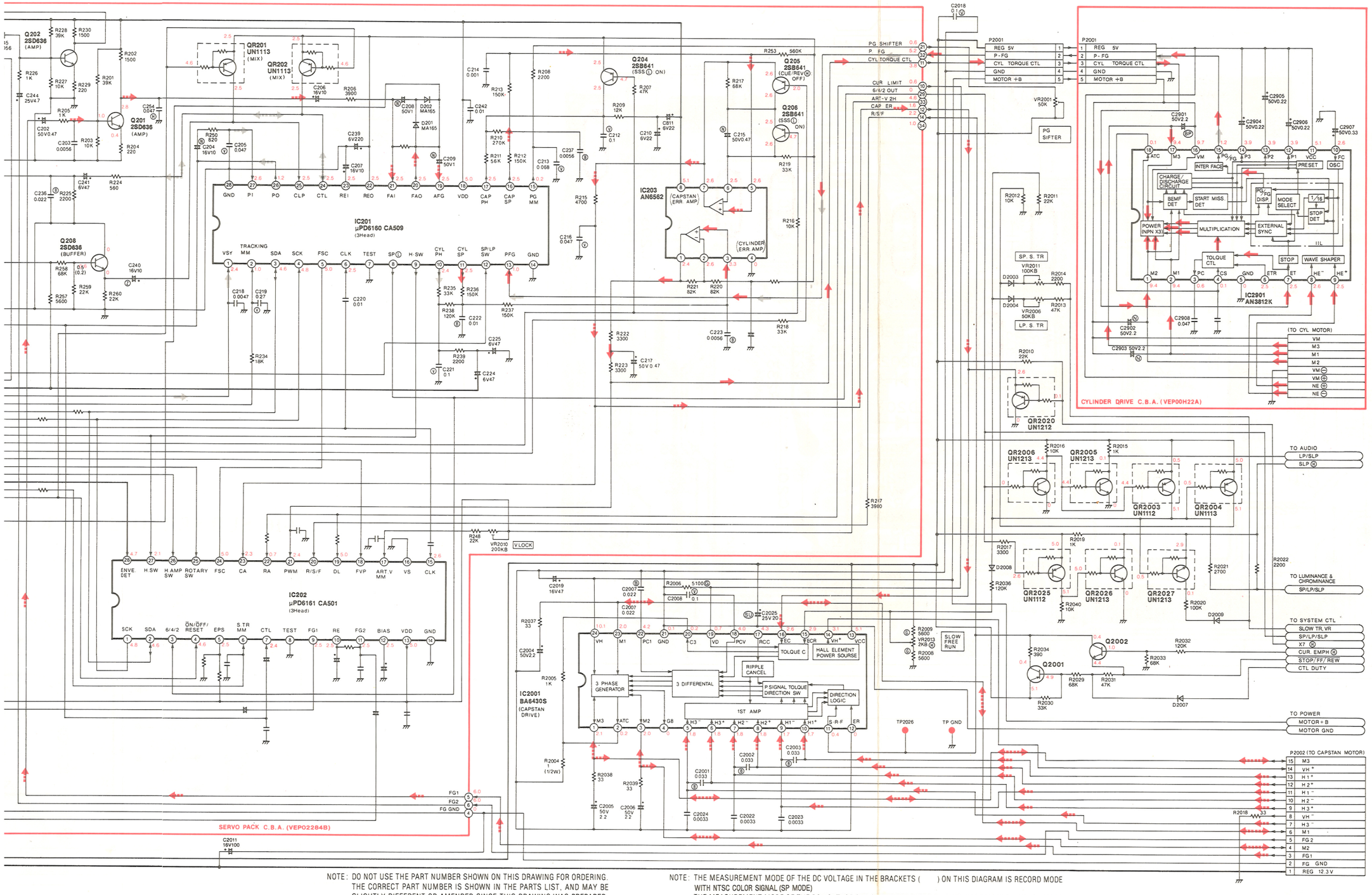

NOTE: DO NOT USE THE PART NUMBER SHOWN ON THIS DRAWING FOR ORDERING. THE CORRECT PART NUMBER IS SHOWN IN THE PARTS LIST, AND MAY BE SLIGHTLY DIFFERENT OR AMENDED SINCE THIS DRAWING WAS PREPARED.

NOTE: THE MEASUREMENT MODE OF THE DC VOLTAGE IN THE BRACKETS ( ) ON THIS DIAGRAM IS RECORD MODE WITH NTSC COLOR SIGNAL (SP MODE)
THE MEASUREMENT MODE OF THE DC VOLTAGE OUT OF THE BRACKETS ON THIS DIAGRAM IS PLAYBACK MODE WITH NTSC COLOR SIGNAL (SP MODE)

5 6 7 8 9 10 11 12 13 14 15

SERVO SCHEMATIC

Transistor	
Q201	G-6
Q202	G-5
Q204	G-10
Q205	G-11
Q206	G-11
Q208	F-5
Q271	G-2
Q272	G-2
Q273	G-1
Q274	G-1
Q2001	C-13
Q2002	C-14
Transistor & Resistor	
QR201	G-7
QR202	G-7
QR2003	D-14
QR2004	D-14
QR2005	D-13
QR2006	D-13
QR2020	D-13
QR2025	C-13
QR2026	C-14
QR2027	C-14
QR2028	A-2
Integrated Circuit	
IC201	F-8
IC202	C-7
IC203	F-10
IC2001	B-9
IC2901	E-15
Test Point	
TP2001	D-2
TP2002	E-2
TP2009	E-2
TP2015	D-2
TP2025	A-3
TP2026	B-12
TP GND	B-12
Adjustment	
VR2001	G-13
VR2002	B-3
VR2006	E-13
VR2010	C-9
VR2011	F-13
VR2013	C-12
Connector	
P2001	G-13
P2001	G-14
P2002	B-15

ADDRESS INFORMATION

3-13. SERVO Section In Main C.B.A. (NV-G21PX/BR)

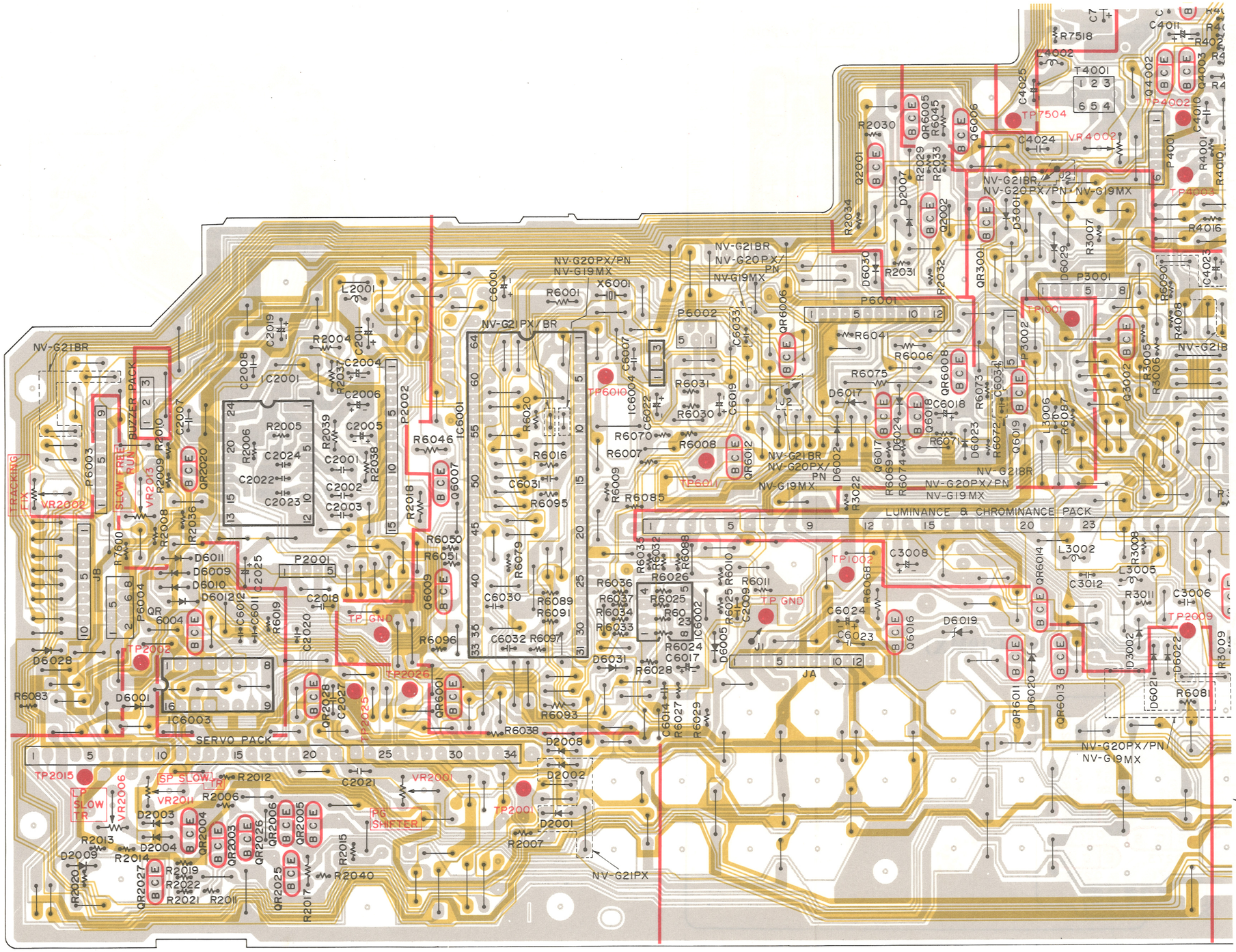
NV-G21BR
NV-G20PX/PN
NV-G19MX
NV-G21PX/BR
SERVO PACK
LUMINANCE & CHROMINANCE PACK
BUZZER PACK
TRACKING FIX
SLOW FREE RUN
SP SLOW
LP SLOW
PG SHIFTER
TP GND
NV-G21PX
TP2002
TP2015
TP2025
TP2026
TP6010
TP6011
TP7504
TP1002
TP4002
TP4003
TP3001
TP2009
VR2002
VR2003
VR2006
VR2011
VR2001
VR4002
IC6001
IC6003
X6001
L2001
L4002
T4001
P6001
P6002
P2001
P2002
P3002
P4001
P6003
P6004
P3001
L3002
L3005
L3006
C3008
C3012
C3006
C4011
C4024
C4025
C4023
C4010
C2001
C2002
C2003
C2004
C2005
C2006
C2007
C2008
C2009
C2018
C2020
C2021
C2022
C2023
C2024
C2025
C2027
C6001
C6002
C6003
C6004
C6005
C6006
C6007
C6009
C6011
C6012
C6014
C6016
C6017
C6018
C6019
C6022
C6023
C6024
C6030
C6031
C6032
C6033
R2001
R2002
R2003
R2004
R2005
R2006
R2007
R2008
R2009
R2010
R2011
R2012
R2013
R2014
R2015
R2017
R2018
R2019
R2020
R2021
R2022
R2027
R2029
R2030
R2031
R2032
R2033
R2034
R2036
R2037
R2038
R2039
R2040
R3002
R3005
R3006
R3007
R3008
R3009
R3011
R3022
R4001
R4008
R4010
R4016
R6001
R6004
R6005
R6006
R6007
R6008
R6009
R6011
R6016
R6017
R6020
R6025
R6026
R6027
R6028
R6029
R6030
R6031
R6033
R6034
R6035
R6036
R6037
R6038
R6041
R6042
R6043
R6044
R6045
R6046
R6050
R6051
R6060
R6061
R6062
R6063
R6064
R6065
R6066
R6067
R6068
R6069
R6070
R6071
R6072
R6073
R6074
R6075
R6079
R6081
R6083
R6085
R6087
R6089
R6091
R6093
R6095
R6096
R6097
R7518
R7600
D2001
D2002
D2003
D2004
D2007
D2008
D2009
D3001
D3002
D6001
D6002
D6003
D6004
D6005
D6007
D6009
D6010
D6011
D6012
D6017
D6019
D6020
D6021
D6022
D6023
D6024
D6027
D6028
D6029
D6030
D6031
Q2001
Q3002
Q4002
Q4003
Q6005
Q6006
Q6007
Q6008
Q6009
Q6011
Q6012
Q6013
Q6014
Q6016
Q6017
Q6018
Q6019
QR2001
QR2002
QR2003
QR2004
QR2005
QR2006
QR2007
QR2008
QR2009
QR2010
QR2011
QR2012
QR2013
QR2014
QR2015
QR2016
QR2017
QR2018
QR2019
QR2020
QR2021
QR2022
QR2023
QR2024
QR2025
QR2026
QR2027
QR3001
QR6001
QR6002
QR6003
QR6004
QR6005
QR6006
QR6007
QR6008
QR6009
QR6010
QR6011
QR6012

3-19. SERVO PACK C.B.A. (VEP02284B: NV-G20PX/PN, NV-G19MX)

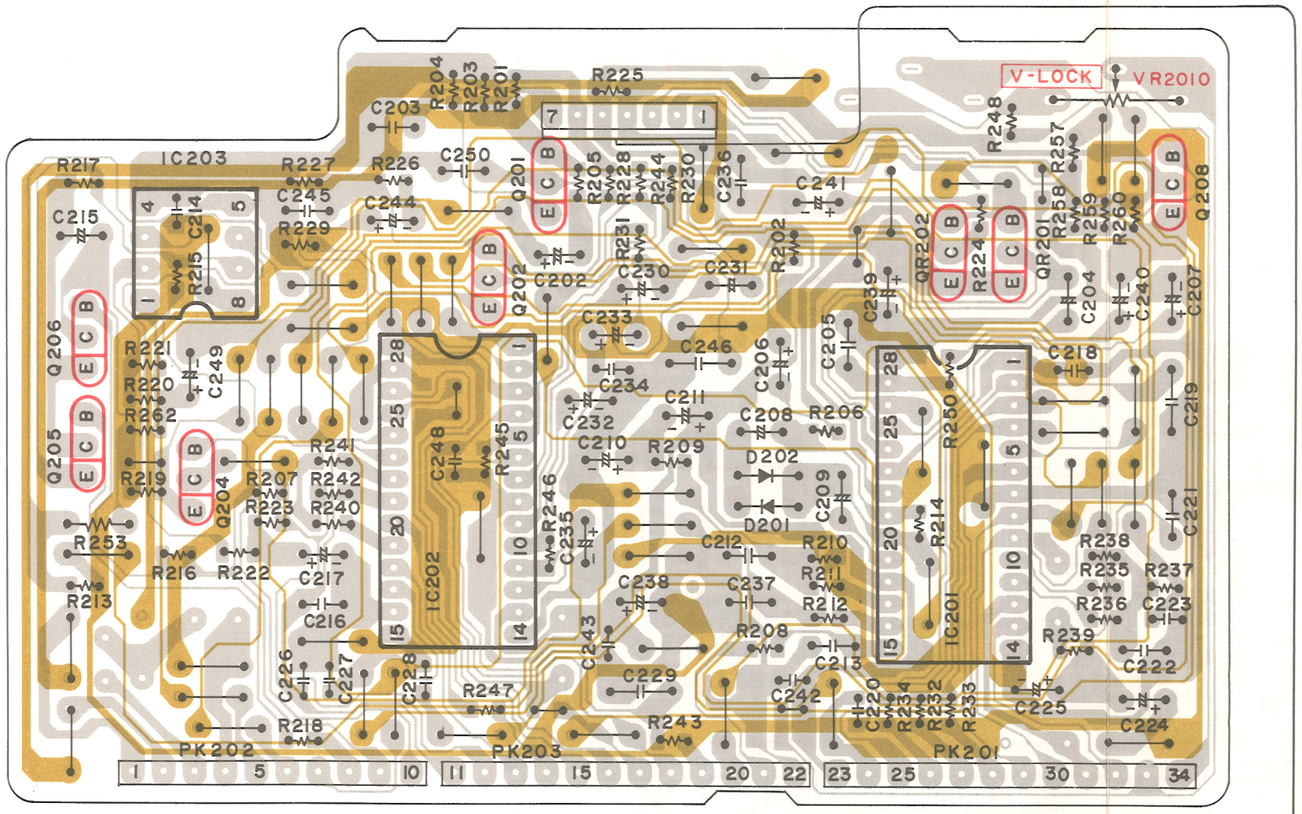

3-20. SUB SERVO (1) PACK C.B.A. (VEP02289B: NV-G20PX/PN, NV-G19MX)

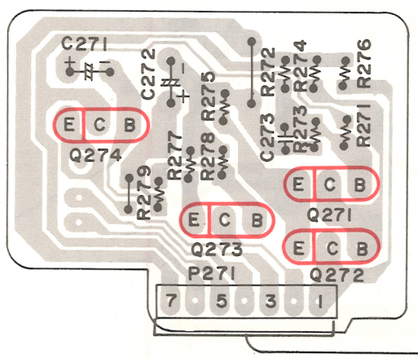

3-21. CYLINDER DRIVE C.B.A. (VEP00H22A: NV-G20PX/PN, NV-G19MX)

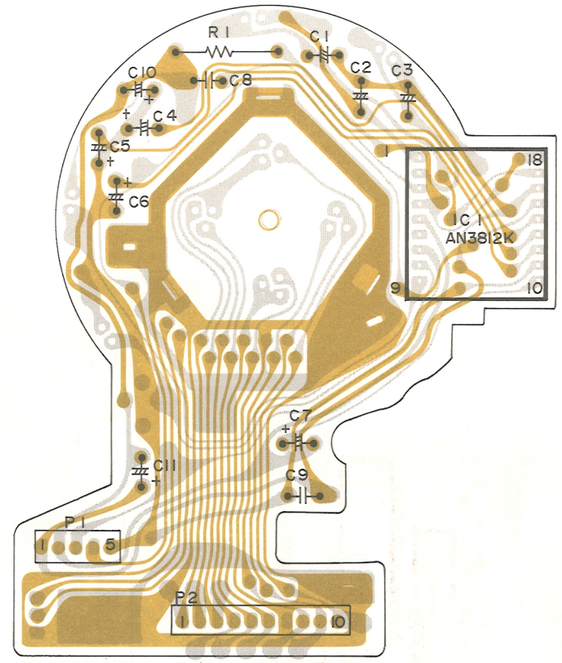

REF. NO. 2900 SERIES

3-22. LUMINANCE & CHROMINANCE SCHEMATIC DIAGRAM

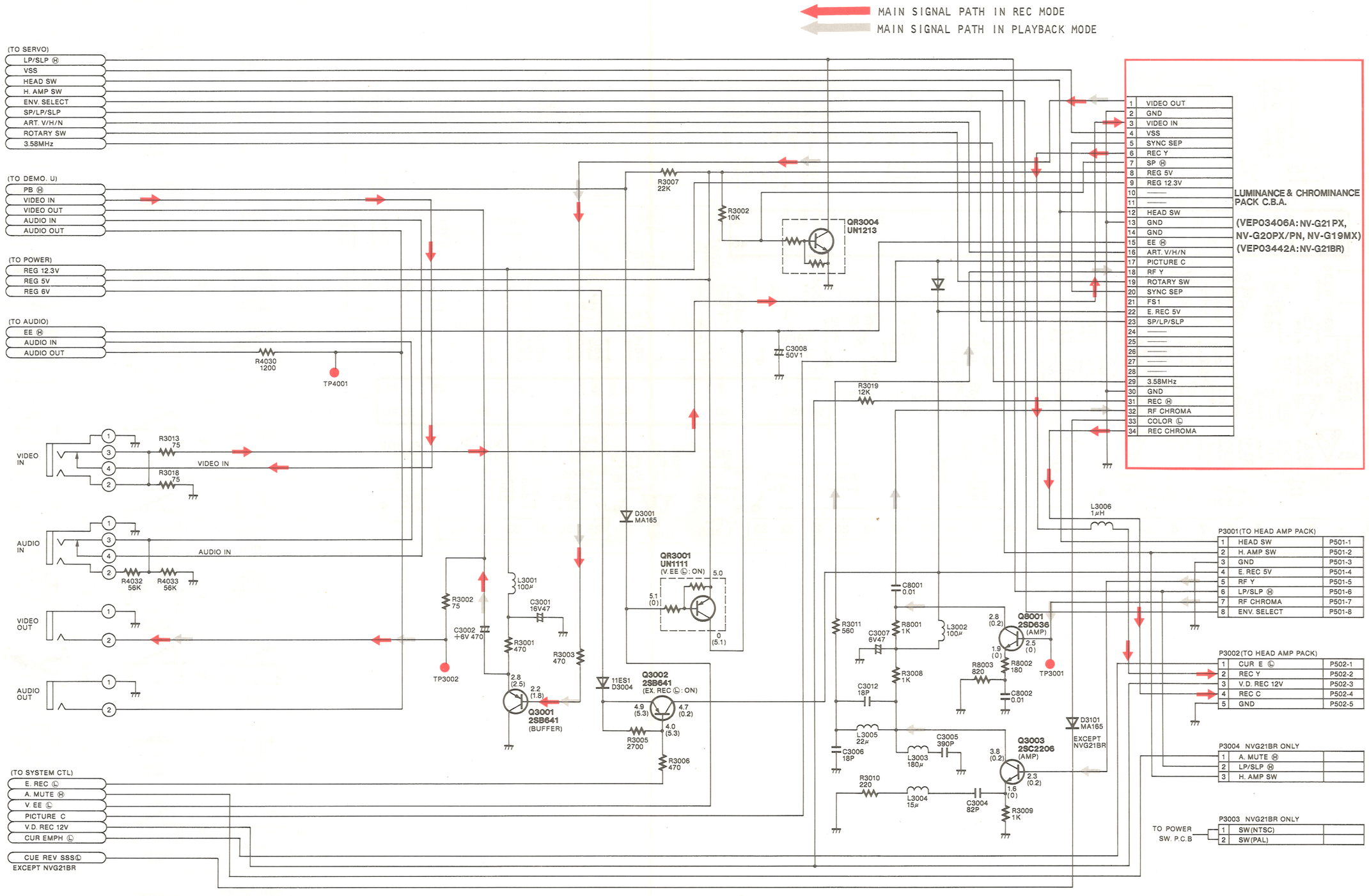

3-23. LUMINANCE & CHROMINANCE Section In Main C.B.A.

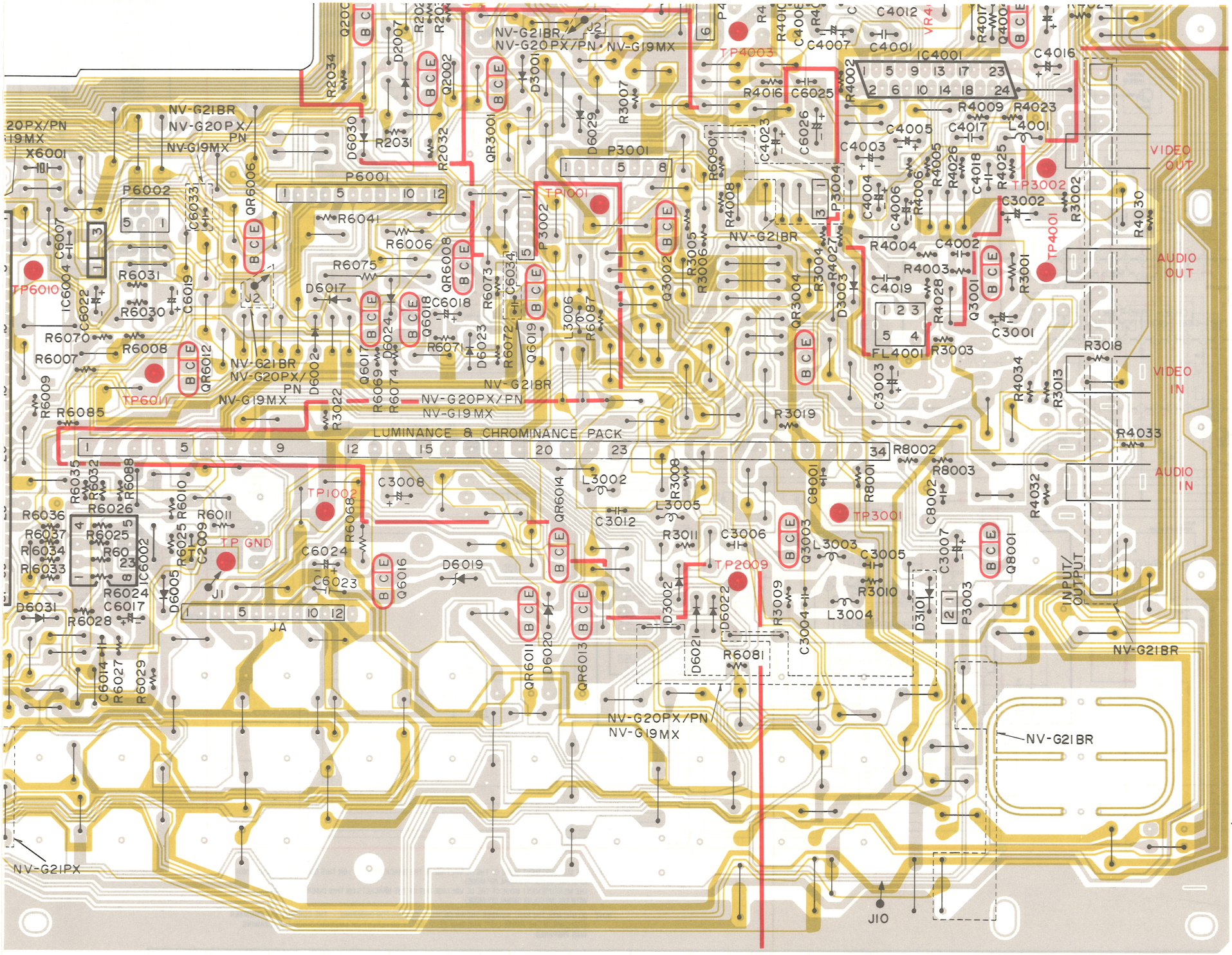

3-24. LUMINANCE & CHROMINANCE PACK SCHEMATIC DIAGRAM (NV-G21BR)

MAIN SIGNAL PATH IN REC MODE
MAIN SIGNAL PATH IN PLAYBACK MODE
4.2MHz PHASE ROTATIONAL SIGNAL IN REC MODE
4.2MHz PHASE ROTATIONAL SIGNAL IN PLAYBACK MODE

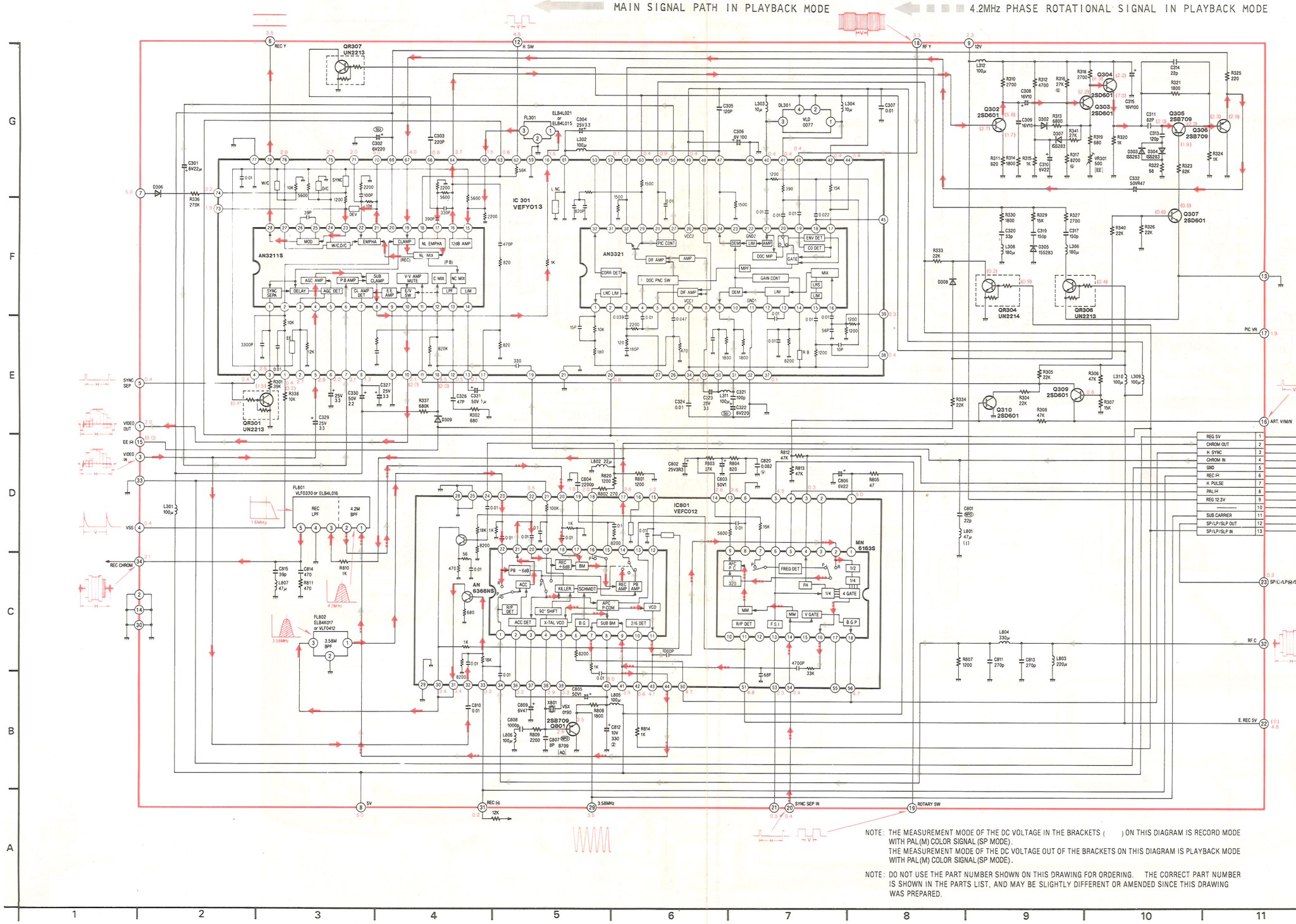

LUMINANCE & CHROMINANCE PACK SCHEMATIC	
Transistor	
Q302	G-9
Q303	G-10
Q304	G-10
Q305	G-10
Q306	G-11
Q307	F-10
Q309	E-9
Q310	E-9
Q801	B-5
Transistor & Resistor	
QR301	E-3
QR304	F-9
QR306	F-9
QR307	G-3
Integrated Circuit	
IC301	F-5
IC801	D-6
Adjustment	
VR301	G-10

ADDRESS INFORMATION

REG 5V	1
CHROM OUT	2
H. SYNC	3
CHROM IN	4
GND	5
REC (H)	6
H. PULSE	7
PAL (H)	8
REG 12.3V	9
———	10
SUB CARRIER	11
SP/LP/SLP OUT	12
SP/LP/SLP IN	13

NTSC-PAL(M) SYSTEM CONVERTER PACK C.B.A. VEP03409A WITH AUTO DETECT C.B.A. (VEP03409A) NV-G21BR ONLY

NOTE: THE MEASUREMENT MODE OF THE DC VOLTAGE IN THE BRACKETS ( ) ON THIS DIAGRAM IS RECORD MODE WITH PAL(M) COLOR SIGNAL (SP MODE).
THE MEASUREMENT MODE OF THE DC VOLTAGE OUT OF THE BRACKETS ON THIS DIAGRAM IS PLAYBACK MODE WITH PAL(M) COLOR SIGNAL (SP MODE).

NOTE: DO NOT USE THE PART NUMBER SHOWN ON THIS DRAWING FOR ORDERING. THE CORRECT PART NUMBER IS SHOWN IN THE PARTS LIST, AND MAY BE SLIGHTLY DIFFERENT OR AMENDED SINCE THIS DRAWING WAS PREPARED.

3-25. LUMINANCE & CHROMINANCE PACK C.B.A. (VEP03442A: NV-G21BR)

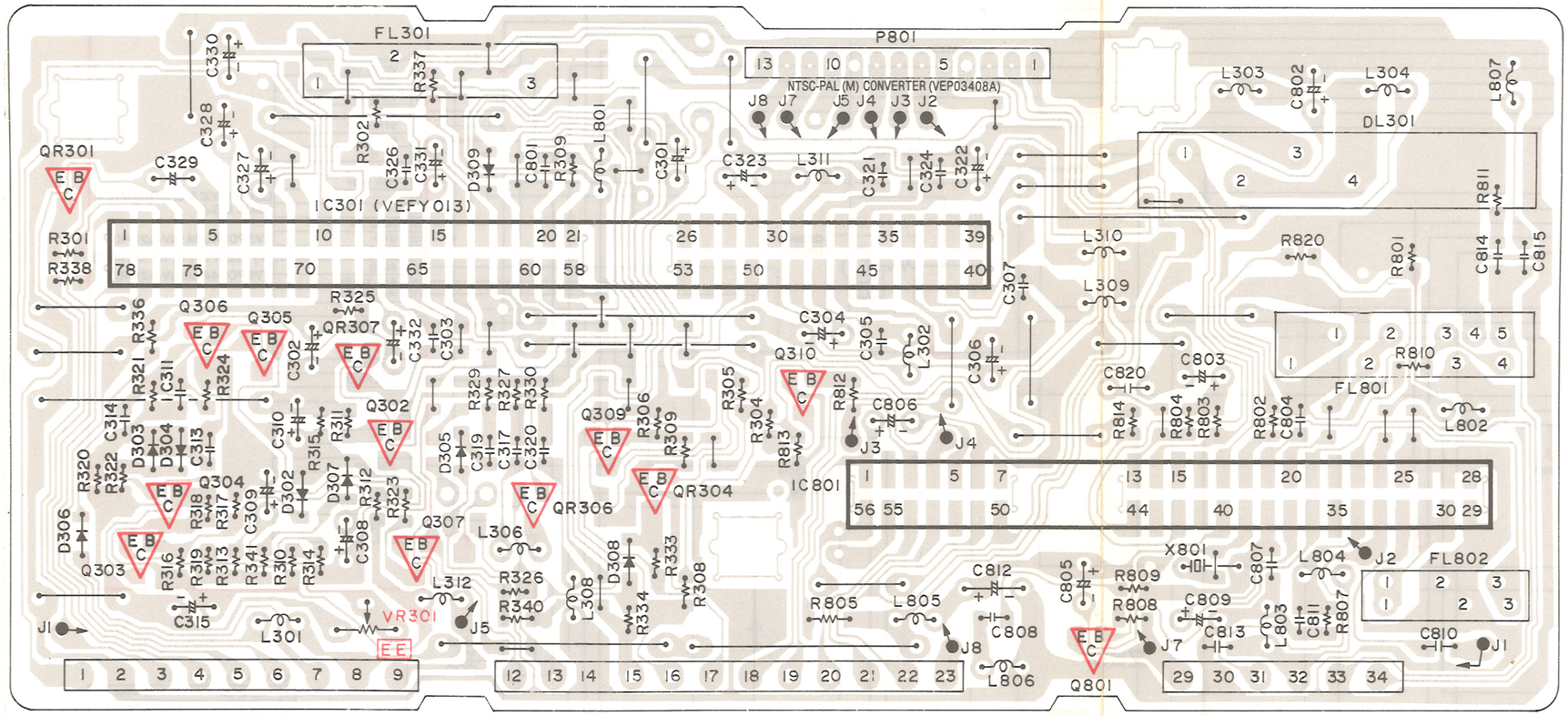

IC301 (VEFY013)

PIN NO.	WAVEFORM	PIN NO.	WAVEFORM
1	2.5Vp-p (REC/P.B)	40	0.05V p-p (P.B)
3	0.8Vp-p (REC/P.B)	41	0.2V p-p (P.B)
4	5.0Vp-p (REC/P.B)	43	0.4V p-p (P.B)
5	1.0Vp-p (REC/P.B)	48	0.2V p-p (P.B)
7	0.3Vp-p (P.B)	50	0.25V p-p (P.B)
10	2.2Vp-p (REC/P.B)	64	1.3V p-p (REC/P.B)
11	2.7V p-p (PAUSE/ STILL)	65	0.32Vp-p (REC/P.B)
16	0.35V p-p (REC)	66	0.6V p-p (REC/P.B)
16	0.35V p-p (P.B)	67	1.3V p-p (REC/P.B)
18, 19	0.5Vp-p (P.B)	70	0.8V p-p (REC)
31	0.4V p-p (P.B)	71	0.28V p-p (REC)
39	0.2V p-p (P.B)	78	1.0V p-p (REC)

IC801 (VEFC012)

PIN NO.	WAVEFORM	PIN NO.	WAVEFORM
3	5.0V p-p (REC/P.B)	32	1.2V p-p (REC/P.B)
5	5.0V p-p (REC/P.B)	34	0.2V p-p (P.B)
17	1.2V p-p (REC) 1.0V p-p (P.B)	38	0.62V p-p (REC/P.B)
18	0.7V p-p (REC) (P.B)	39	0.7V p-p (REC/P.B)
20	280mV p-p (P.B)	44	0.7V p-p (REC/P.B)
22	0.6V p-p (REC) 0.5V p-p (P.B)	50	5V p-p (REC/P.B)
23	0.3V p-p (REC) 0.22V p-p (P.B)	53	5.0V p-p (REC/P.B)
24	80mV p-p (P.B)	54	5.0V p-p (REC)
30, 31	1.7V p-p (REC)	54	4.5V p-p (P.B)
30, 31	1.0V p-p (P.B)	56	5.0Vp-p (REC/P.B)

3-26. LUMINANCE & CHROMINANCE PACK SCHEMATIC DIAGRAM (NV-G21PX

MAIN SIGNAL PATH IN REC MODE
MAIN SIGNAL PATH IN PLAYBACK MODE
4.2MHz PHASE ROTATIONAL SIGNAL IN REC MODE
4.2MHz PHASE ROTATIONAL SIGNAL IN PLAYBACK MODE

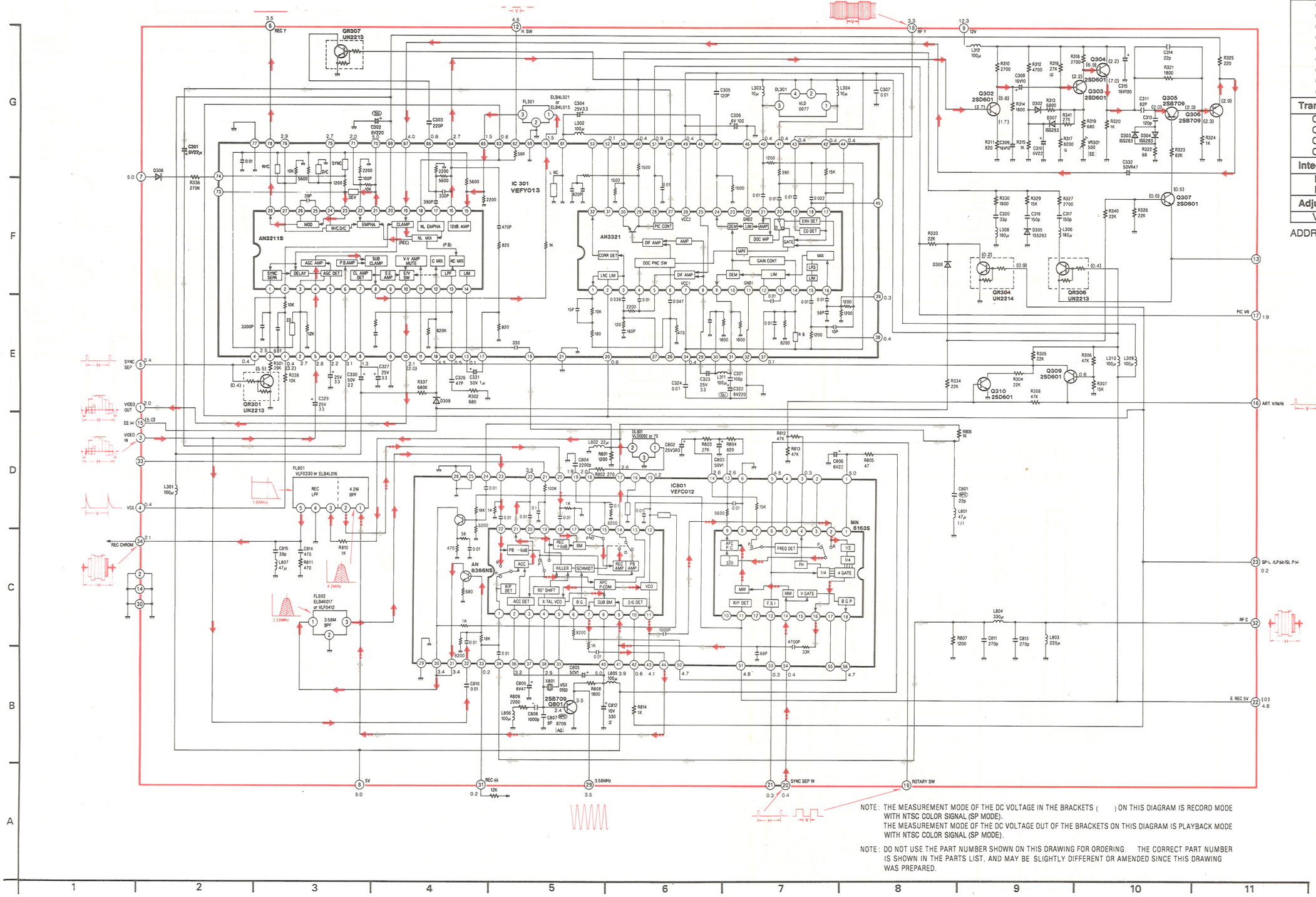

NOTE: THE MEASUREMENT MODE OF THE DC VOLTAGE IN THE BRACKETS ( ) ON THIS DIAGRAM IS RECORD MODE WITH NTSC COLOR SIGNAL (SP MODE).
THE MEASUREMENT MODE OF THE DC VOLTAGE OUT OF THE BRACKETS ON THIS DIAGRAM IS PLAYBACK MODE WITH NTSC COLOR SIGNAL (SP MODE).

NOTE: DO NOT USE THE PART NUMBER SHOWN ON THIS DRAWING FOR ORDERING. THE CORRECT PART NUMBER IS SHOWN IN THE PARTS LIST, AND MAY BE SLIGHTLY DIFFERENT OR AMENDED SINCE THIS DRAWING WAS PREPARED.

LUMINANCE & CHROMINANCE PACK SCHEMATIC	
Transistor	
Q302	G-9
Q303	G-10
Q304	G-10
Q305	G-10
Q306	G-11
Q307	F-10
Q309	E-9
Q310	E-9
Q801	B-5
Transistor & Resistor	
QR301	E-3
QR304	F-9
QR306	F-9
QR307	G-3
Integrated Circuit	
IC301	F-5
IC801	D-6
Adjustment	
VR301	G-10

ADDRESS INFORMATION

ACK
G-9
G-10
G-10
G-10
G-11
F-10
E-9
E-9
B-5
or
E-3
F-9
F-9
G-3
F-5
D-6
G-10
TION

3-27. LUMINANCE & CHROMINANCE PACK C.B.A. (VEP03406A:

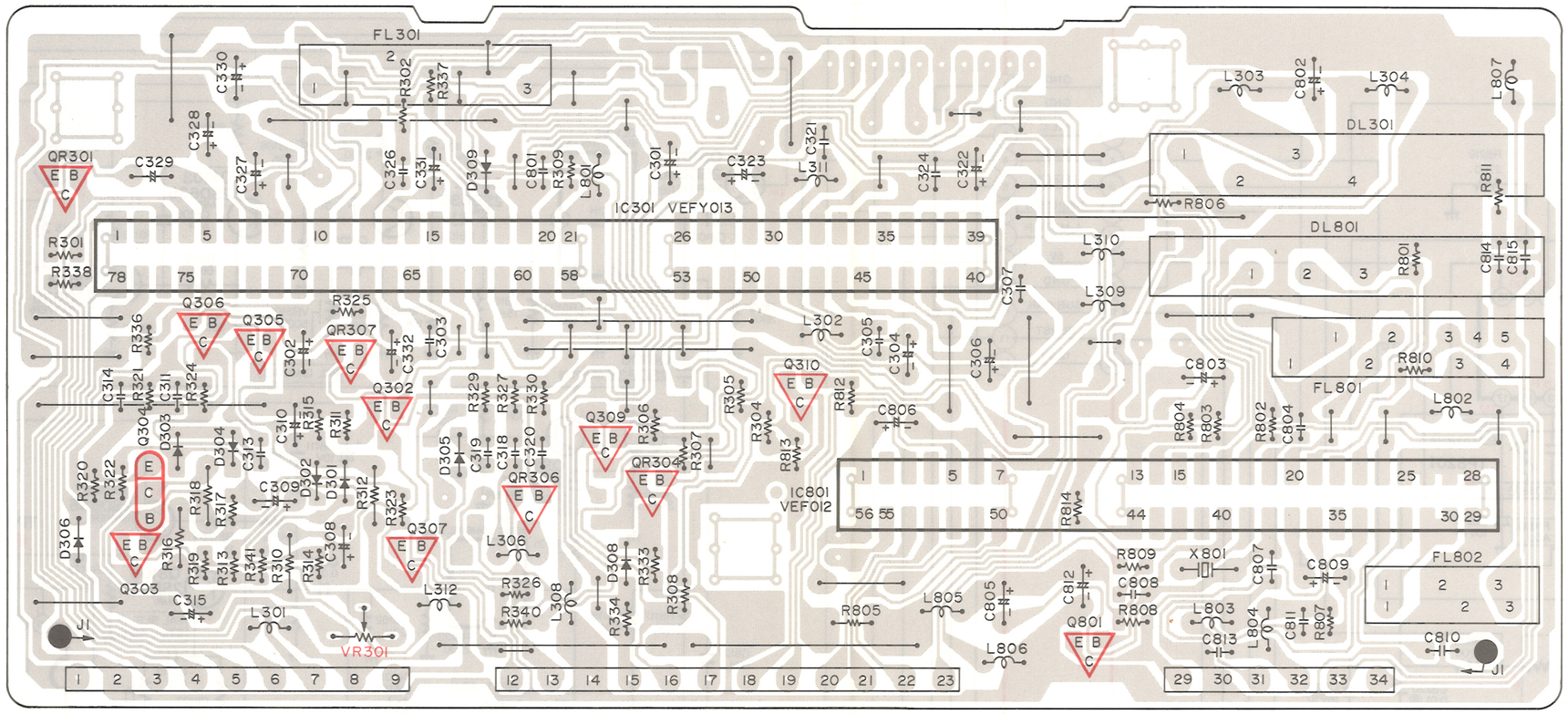

3-28. NTSC-PAL (M) CONVERTER & AUTO DETECT SCHEMATIC DIAGRAM (NV-G21BR)

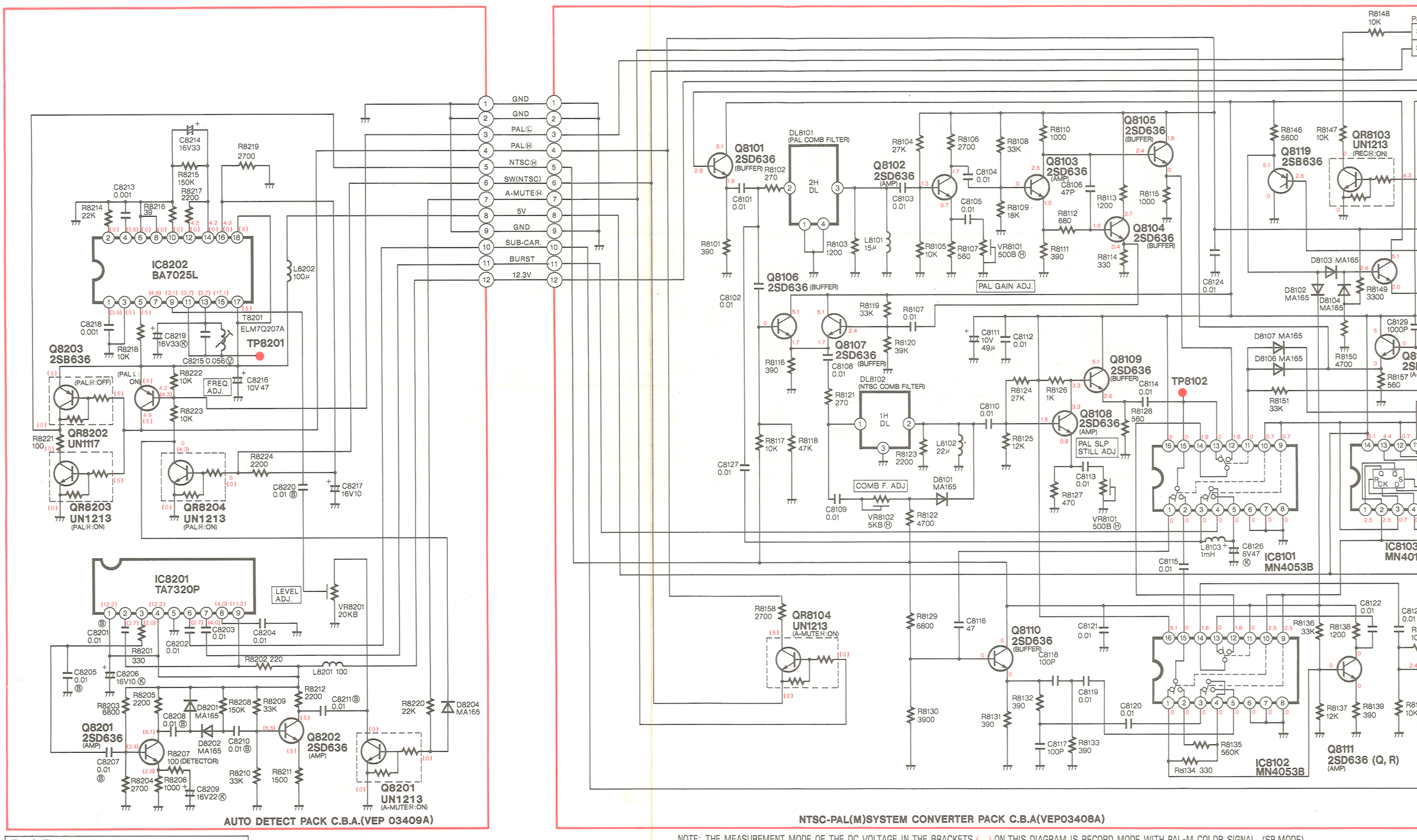

NOTE: THE MEASUREMENT MODE OF THE DC VOLTAGE IN THE BRACKETS ( ) ON THIS DIAGRAM IS RECORD MODE WITH PAL-M COLOR SIGNAL (SP MODE).
THE MEASUREMENT MODE OF THE DC VOLTAGE OUT OF THE BRACKET ON THIS DIAGRAM IS PLAYBACK MODE WITH PAL-M COLOR SIGNAL (SP MODE).

Back Page:
LUMINANCE & CHROMINANCE Section

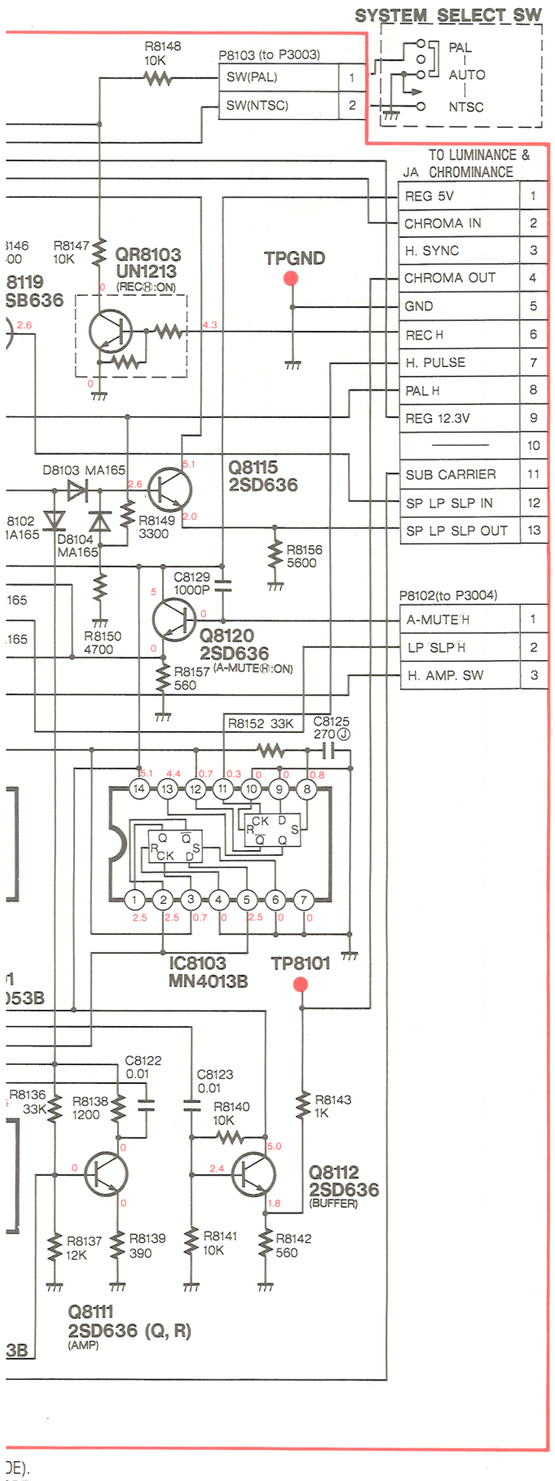

)DE).
)DE).

3-29. NTSC-PAL (M) CONVERTER PACK C.B.A. (VEP03408A: NV-G21BR)

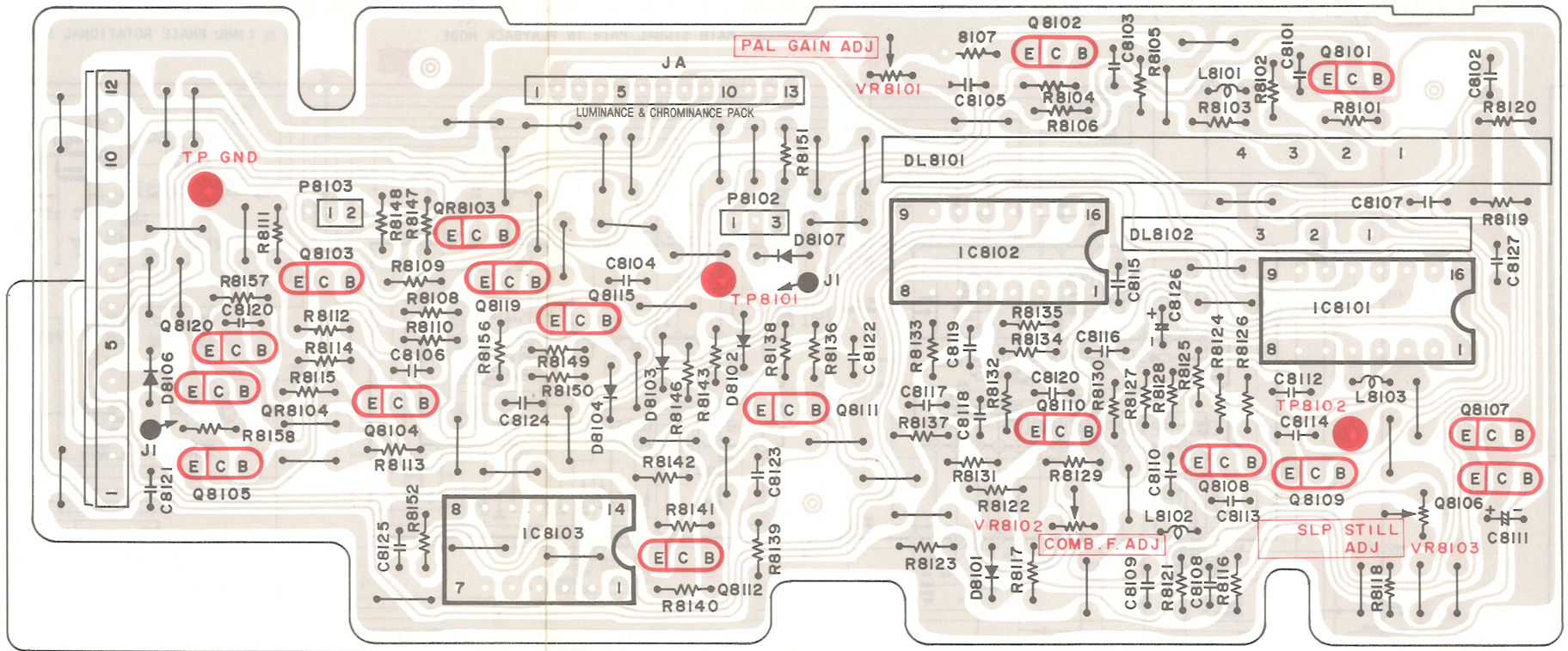

3-30. AUTO DETECT PACK C.B.A. (VEP03409A:

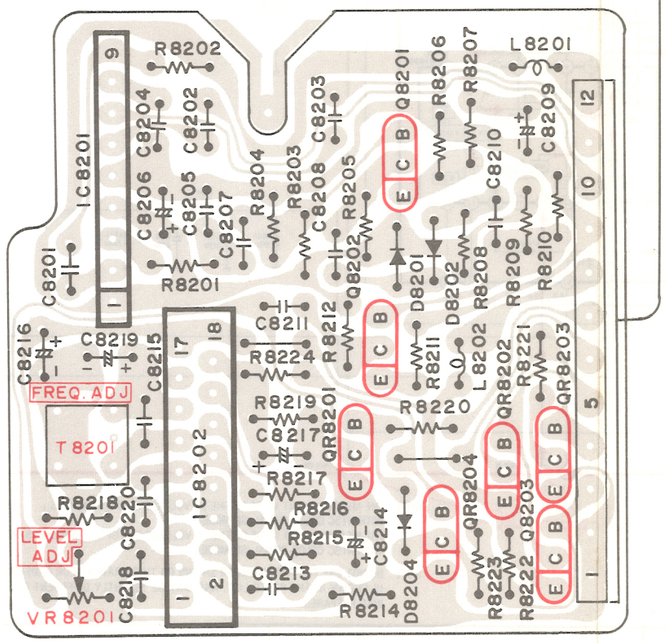

3-31. HEAD AMP PACK C.B.A. (VEP05097A:

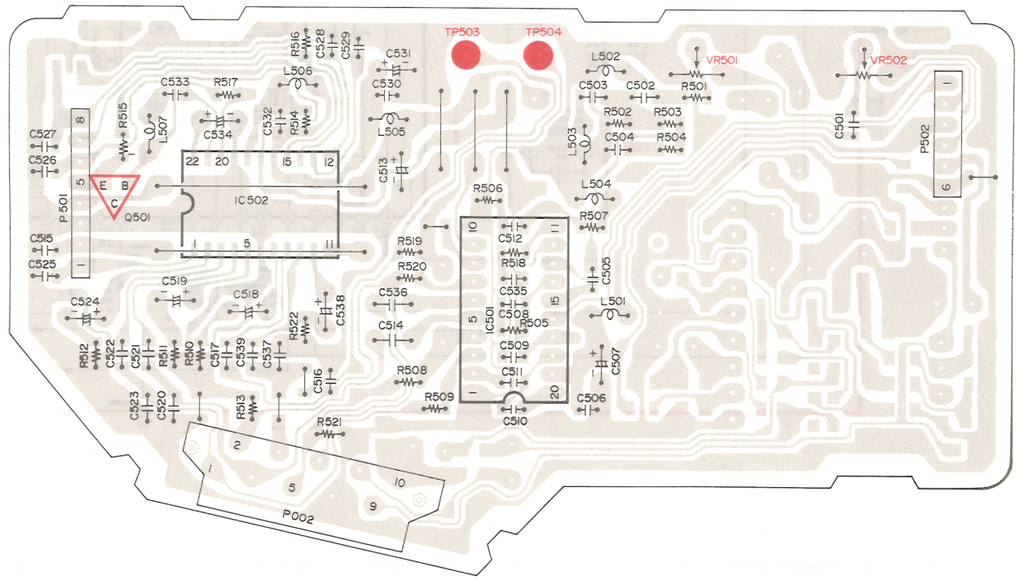

3-32. HEAD AMP PACK SCHEMATIC DIAGRAM (NV-G21PX/BR)

MAIN SIGNAL PATH IN REC MODE

MAIN SIGNAL P

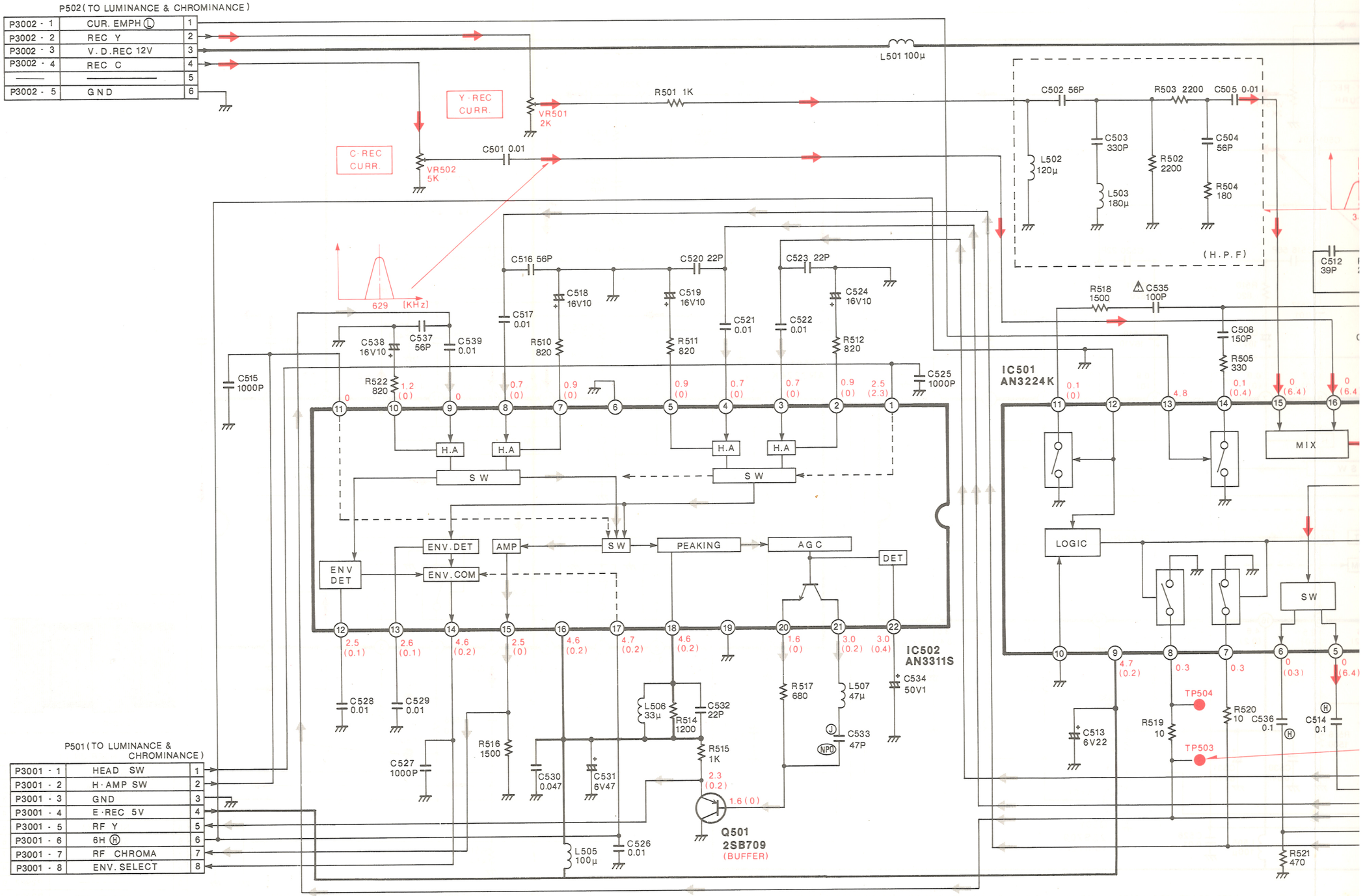

NOTE: DO NOT USE THE PART NUMBER SHOWN ON THIS DRAWING FOR ORDERING. THE CORRECT PART NUMBER IS SHOWN IN THE PARTS LIST, AND MAY BE SLIGHTLY DIFFERENT OR AMENDED SINCE THIS DRAWING WAS PREPARED.

NOTE: THE MEASUREMENT MODE OF THE DC VOLTAGE IN TH
WITH NTSC COLOR SIGNAL (SP MODE)
THE MEASUREMENT MODE OF THE DC VOLTAGE OUT
WITH NTSC COLOR SIGNAL (SP MODE)

(NV-G21PX/BR)

MAIN SIGNAL PATH IN REC MODE　　MAIN SIGNAL PATH IN PLAYBACK MODE

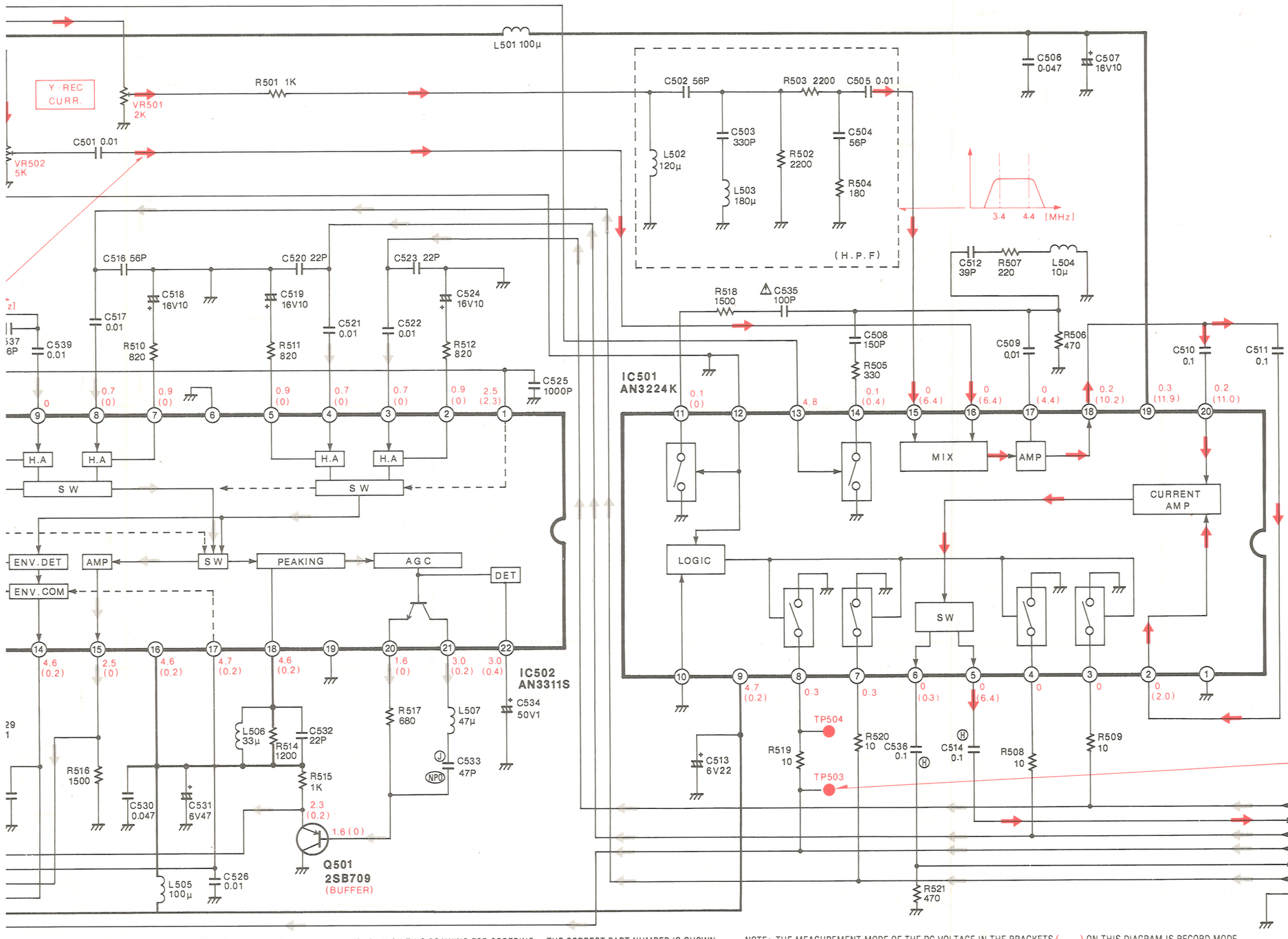

NOTE: DO NOT USE THE PART NUMBER SHOWN ON THIS DRAWING FOR ORDERING. THE CORRECT PART NUMBER IS SHOWN IN THE PARTS LIST, AND MAY BE SLIGHTLY DIFFERENT OR AMENDED SINCE THIS DRAWING WAS PREPARED.

NOTE: THE MEASUREMENT MODE OF THE DC VOLTAGE IN THE BRACKETS ( ) ON THIS DIAGRAM IS RECORD MODE WITH NTSC COLOR SIGNAL (SP MODE)
THE MEASUREMENT MODE OF THE DC VOLTAGE OUT OF THE BRACKETS ON THIS DIAGRAM IS PLAYBACK MODE WITH NTSC COLOR SIGNAL (SP MODE)

Next Page:
HEAD AMP Section

3-33. HEAD AMP PACK SCHEMATIC DIAGRAM (NV-G20PX/PN, NV-G19MX)

MAIN SIGNAL PATH IN REC MODE

MAIN SIGNAL PATH IN

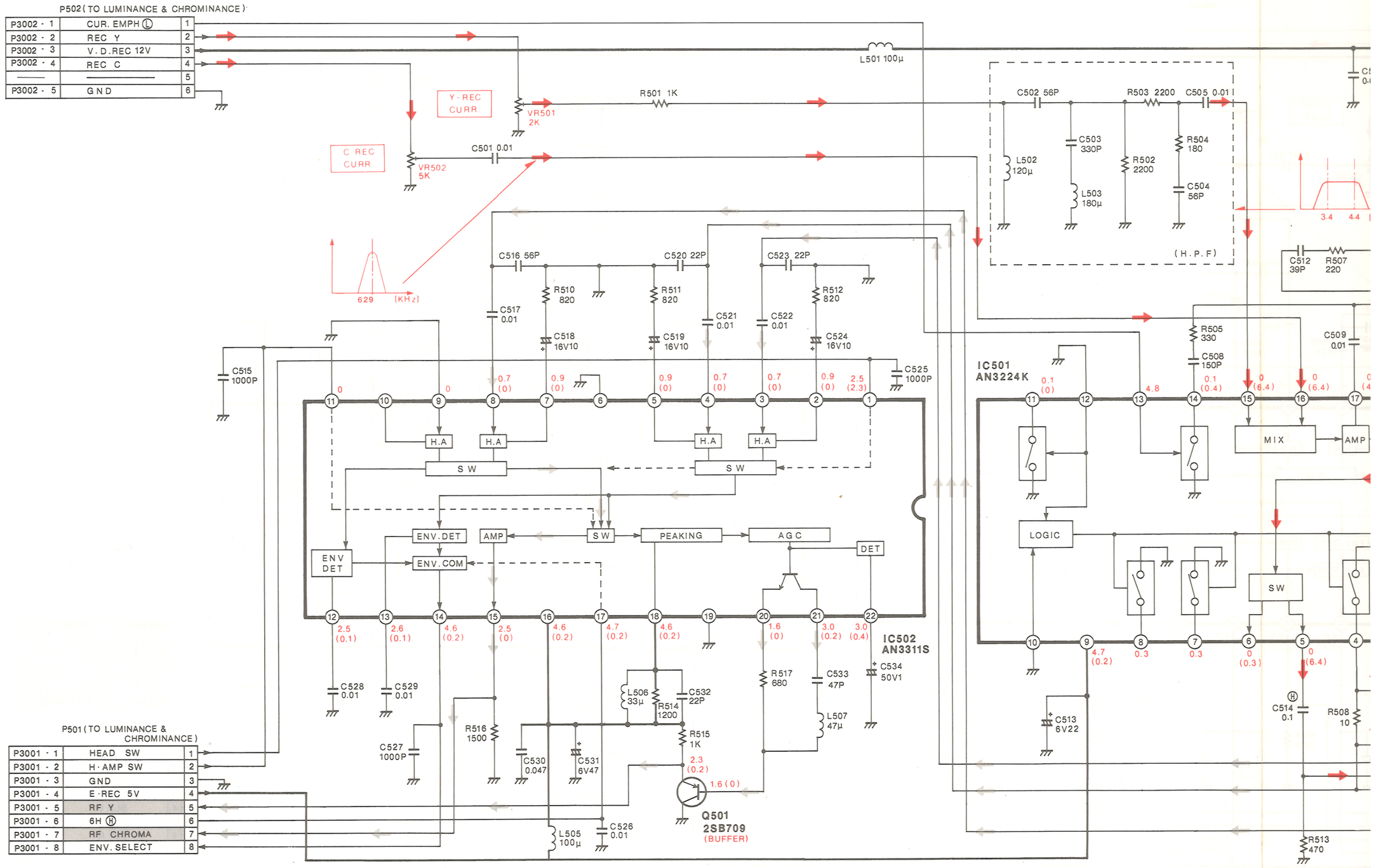

NOTE: DO NOT USE THE PART NUMBER SHOWN ON THIS DRAWING FOR ORDERING. THE CORRECT PART NUMBER IS SHOWN IN THE PARTS LIST, AND MAY BE SLIGHTLY DIFFERENT OR AMENDED SINCE THIS DRAWING WAS PREPARED.

NOTE: THE MEASUREMENT MODE OF THE DC VOLTAGE IN THE BRACKET
WITH NTSC COLOR SIGNAL (SP MODE)
THE MEASUREMENT MODE OF THE DC VOLTAGE OUT OF THE BRA
WITH NTSC COLOR SIGNAL (SP MODE)

MAIN SIGNAL PATH IN REC MODE

MAIN SIGNAL PATH IN PLAYBACK MODE

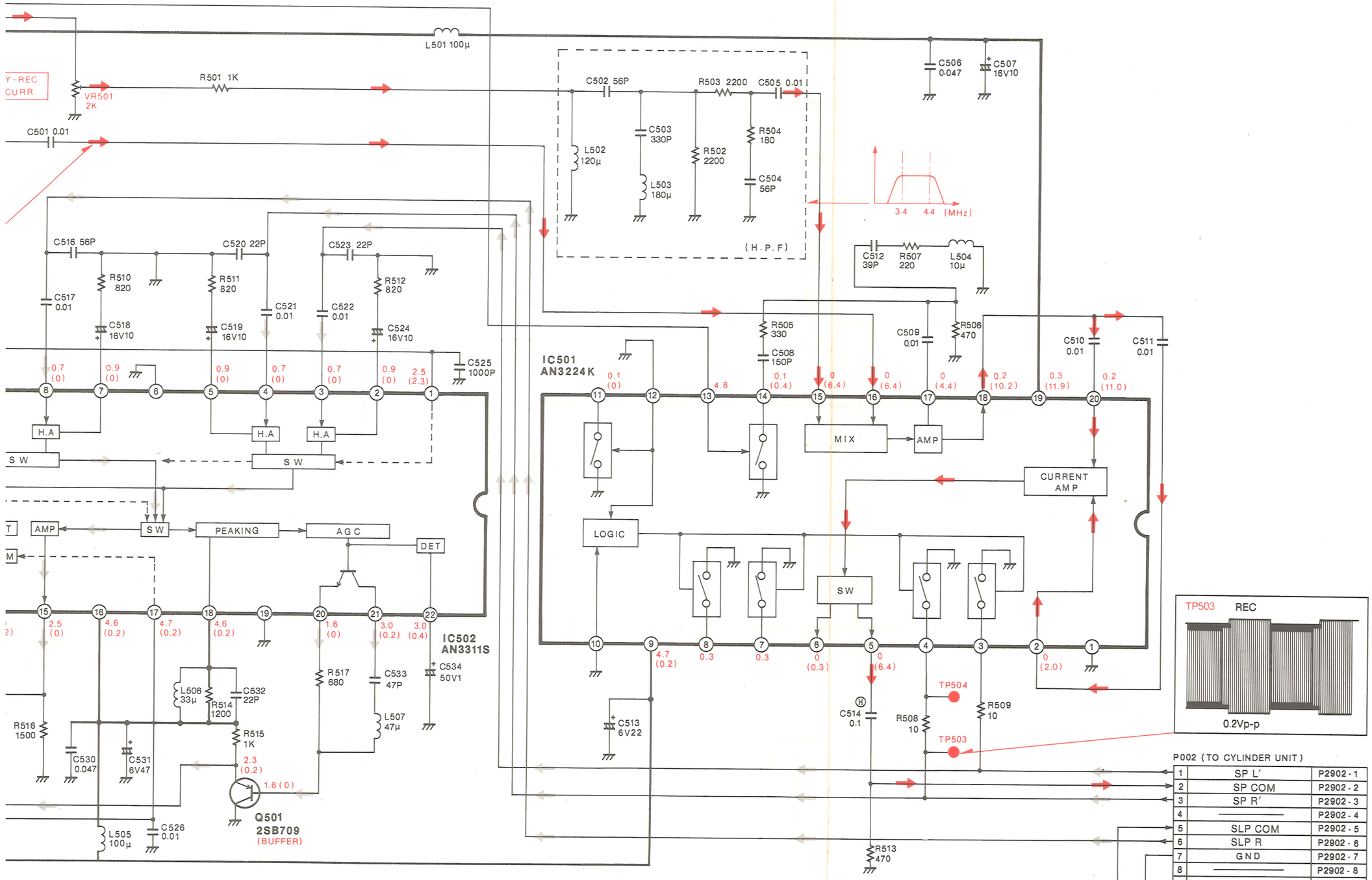

P002 (TO CYLINDER UNIT)

1	SP L′	P2902 - 1
2	SP COM	P2902 - 2
3	SP R′	P2902 - 3
4	——	P2902 - 4
5	SLP COM	P2902 - 5
6	SLP R	P2902 - 6
7	GND	P2902 - 7
8	——	P2902 - 8
9	——	P2902 - 9
10	——	P2902 - 10

NOTE: DO NOT USE THE PART NUMBER SHOWN ON THIS DRAWING FOR ORDERING. THE CORRECT PART NUMBER IS SHOWN IN THE PARTS LIST, AND MAY BE SLIGHTLY DIFFERENT OR AMENDED SINCE THIS DRAWING WAS PREPARED.

NOTE: THE MEASUREMENT MODE OF THE DC VOLTAGE IN THE BRACKETS ( ) ON THIS DIAGRAM IS RECORD MODE WITH NTSC COLOR SIGNAL (SP MODE)
THE MEASUREMENT MODE OF THE DC VOLTAGE OUT OF THE BRACKETS ON THIS DIAGRAM IS PLAYBACK MODE WITH NTSC COLOR SIGNAL (SP MODE)

3-34. HEAD AMP PACK C.B.A. (VEP05097H:

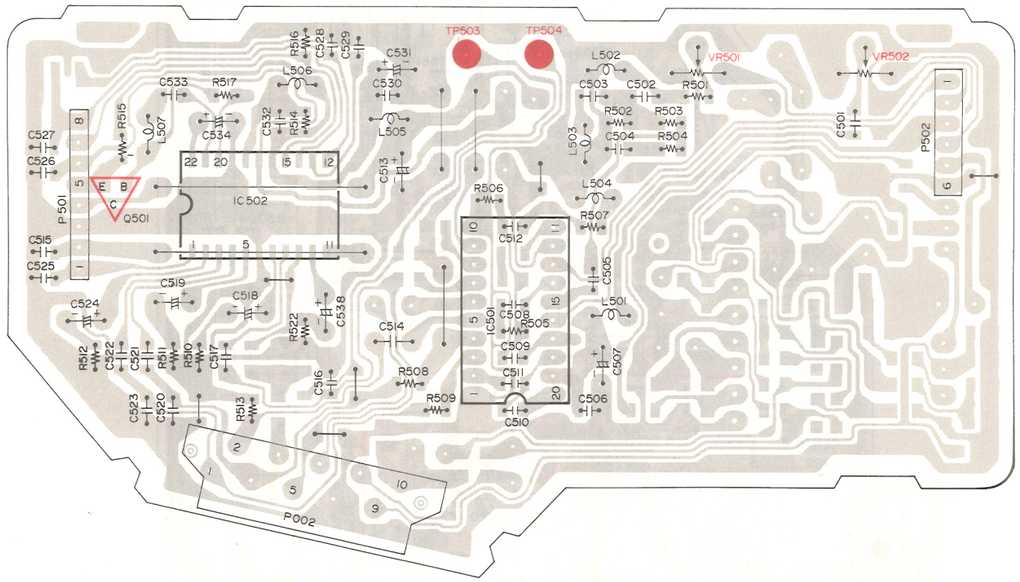

3-35. AUDIO SCHEMATIC DIAGRAM

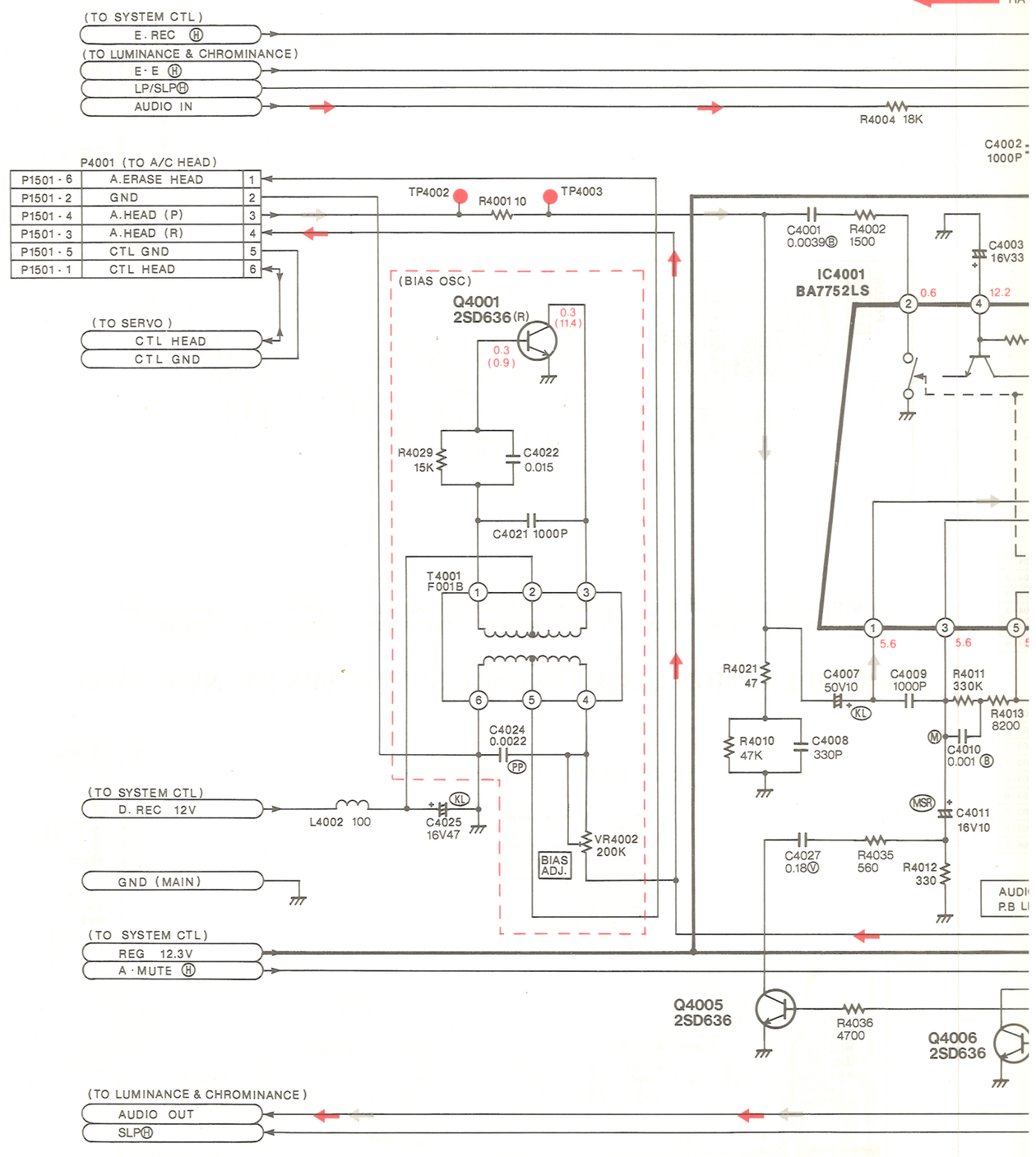

NOTE: THE MEASUREMENT MODE OF THE DC VOLTAGE IN THE BRACKETS ( ) ON THIS
WITH 1kHz, 0dB SINE WAVE SIGNAL.
THE MEASUREMENT MODE OF THE DC VOLTAGE OUT OF THE BRACKETS ON THIS DI
WITH 1kHz, 0dB SINE WAVE SIGNAL.

3-36. AUDIO Section In Main C.B.A.

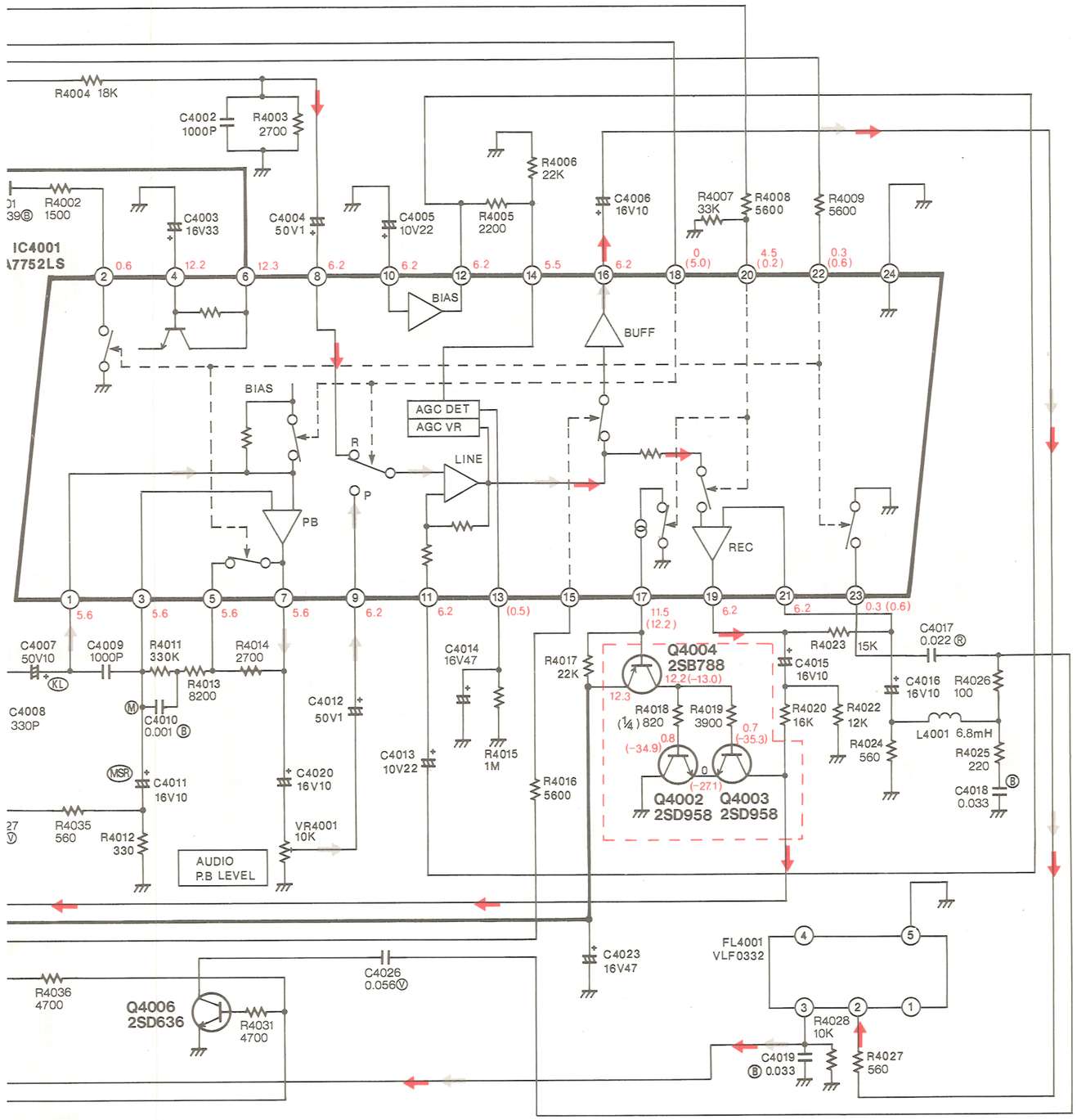

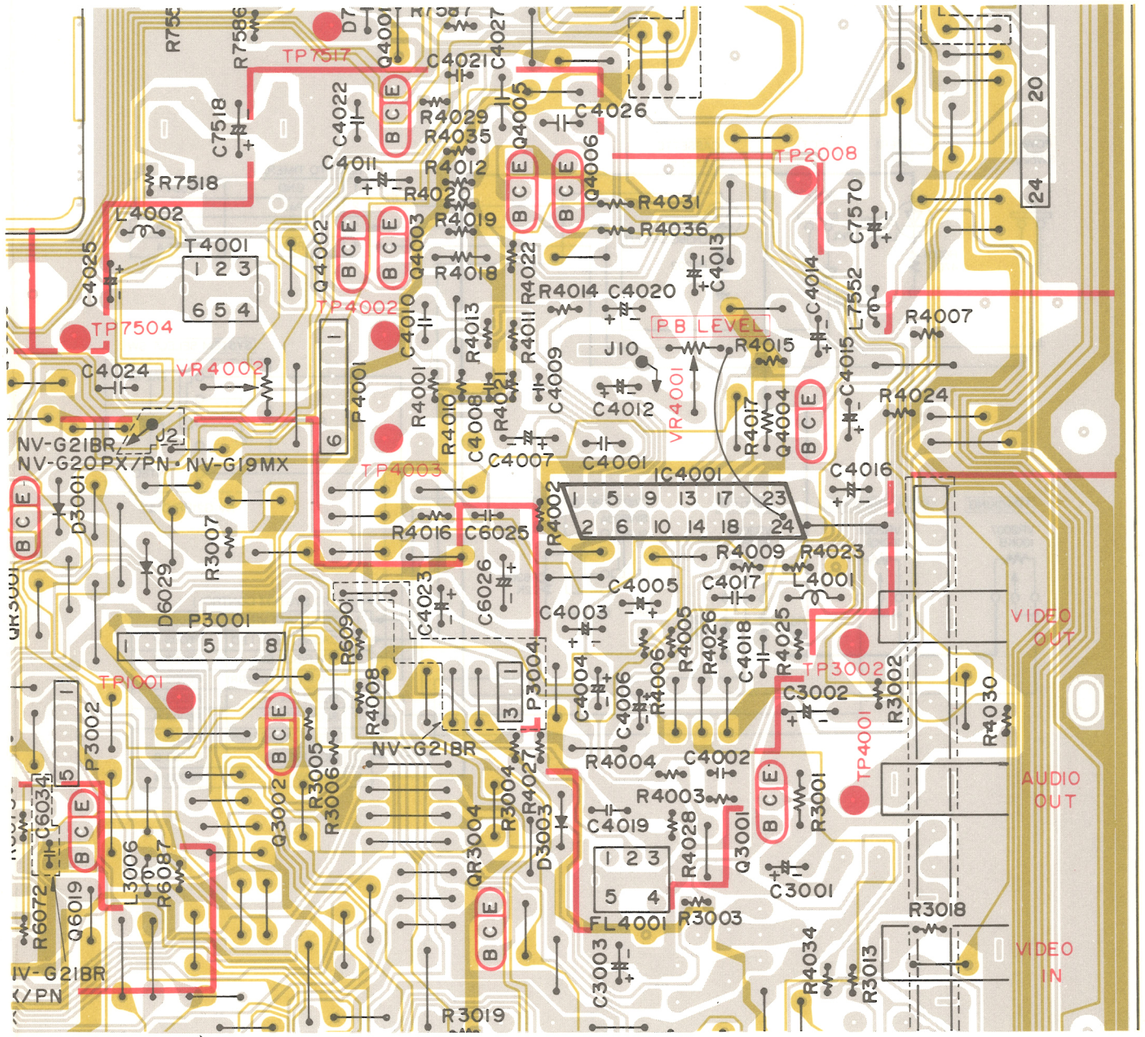

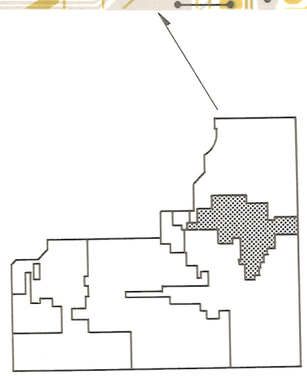

OLTAGE IN THE BRACKETS ( ) ON THIS DIAGRAM IS RECORD MODE

OLTAGE OUT OF THE BRACKETS ON THIS DIAGRAM IS PLAYBACK MODE

NOTE: DO NOT USE THE PART NUMBER SHOWN ON THIS DRAWING FOR ORDERING. THE CORRECT PART NUMBER IS SHOWN IN THE PARTS LIST, AND MAY BE SLIGHTLY DIFFERENT OR AMENDED SINCE THIS DRAWING WAS PREPARED.

3-37. OPERATION SCHEMATIC DIAGRAM (NV-G21PX/BR)

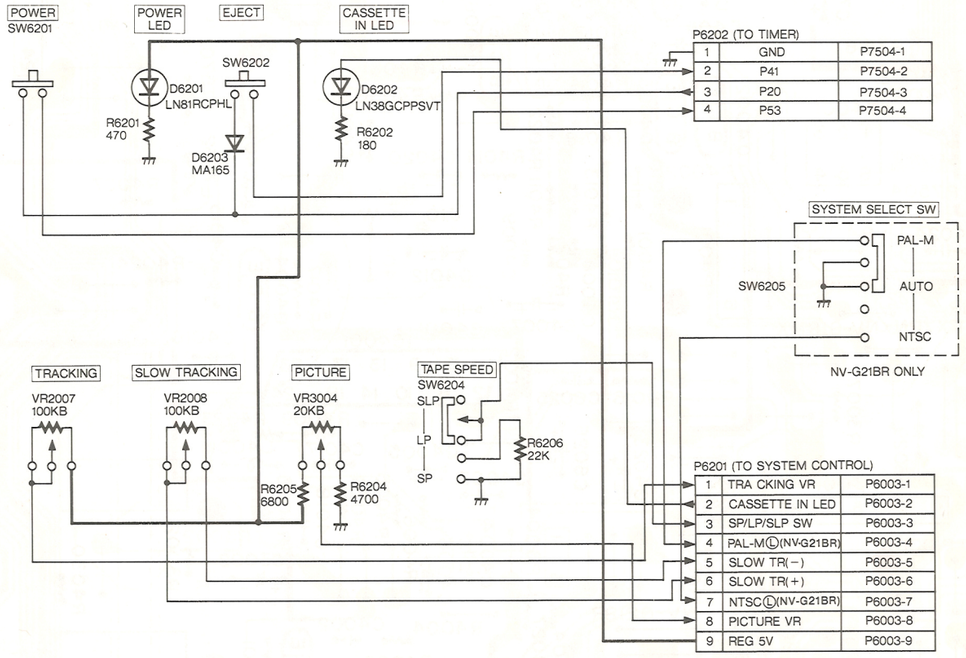

P6202 (TO TIMER)

1	GND	P7504-1
2	P41	P7504-2
3	P20	P7504-3
4	P53	P7504-4

P6201 (TO SYSTEM CONTROL)

1	TRA CKING VR	P6003-1
2	CASSETTE IN LED	P6003-2
3	SP/LP/SLP SW	P6003-3
4	PAL-MⒹ(NV-G21BR)	P6003-4
5	SLOW TR(−)	P6003-5
6	SLOW TR(+)	P6003-6
7	NTSCⒹ(NV-G21BR)	P6003-7
8	PICTURE VR	P6003-8
9	REG 5V	P6003-9

3-38. OPERATION SCHEMATIC DIAGRAM (NV-G20PX/PN, NV-G19MX)

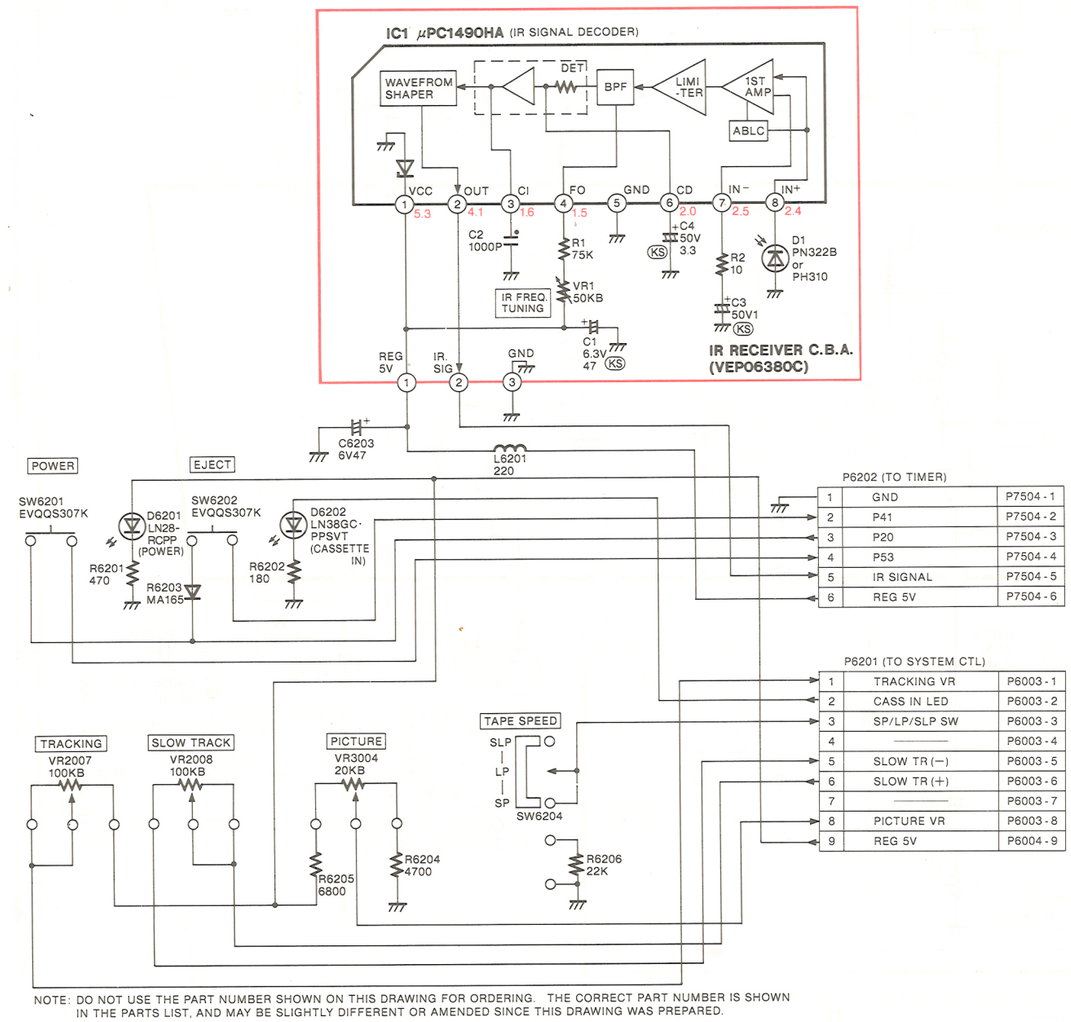

P6202 (TO TIMER)

1	GND	P7504-1
2	P41	P7504-2
3	P20	P7504-3
4	P53	P7504-4
5	IR SIGNAL	P7504-5
6	REG 5V	P7504-6

P6201 (TO SYSTEM CTL)

1	TRACKING VR	P6003-1
2	CASS IN LED	P6003-2
3	SP/LP/SLP SW	P6003-3
4	————	P6003-4
5	SLOW TR(−)	P6003-5
6	SLOW TR(+)	P6003-6
7	————	P6003-7
8	PICTURE VR	P6003-8
9	REG 5V	P6004-9

NOTE: DO NOT USE THE PART NUMBER SHOWN ON THIS DRAWING FOR ORDERING. THE CORRECT PART NUMBER IS SHOWN IN THE PARTS LIST, AND MAY BE SLIGHTLY DIFFERENT OR AMENDED SINCE THIS DRAWING WAS PREPARED.

3-39. OPE

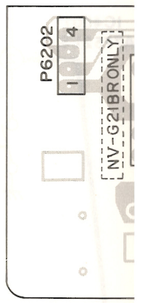

NOTE: D
IN

3-40. OI

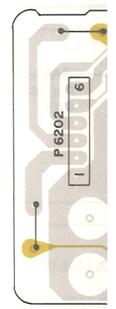

Back Page:
AUDIO Section

3-39. OPERATION C.B.A. (VEP06403A: NV-G21PX, VEP06403B; NV-G21BR)

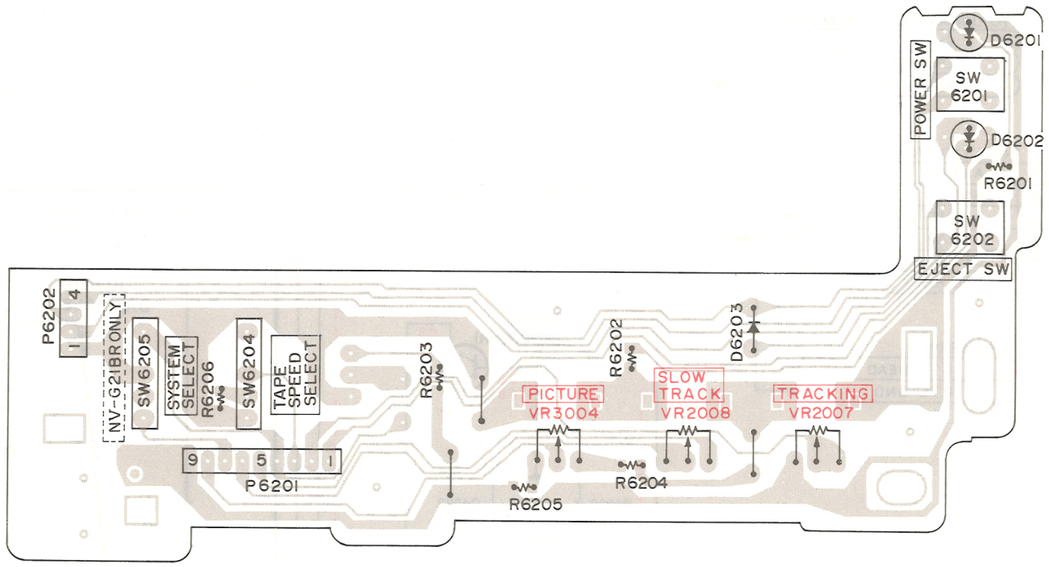

NOTE: DO NOT USE THE PART NUMBER SHOWN ON THIS DRAWING FOR ORDERING. THE CORRECT PART NUMBER IS SHOWN IN THE PARTS LIST, AND MAY BE SLIGHTLY DIFFERENT OR AMENDED SINCE THIS DRAWING WAS PREPARED.

3-40. OPERATION C.B.A. (VEP06411B: NV-G20PX/PN, NV-G19MX)

1R RECIEVER C.B.A. (VEP06380C)

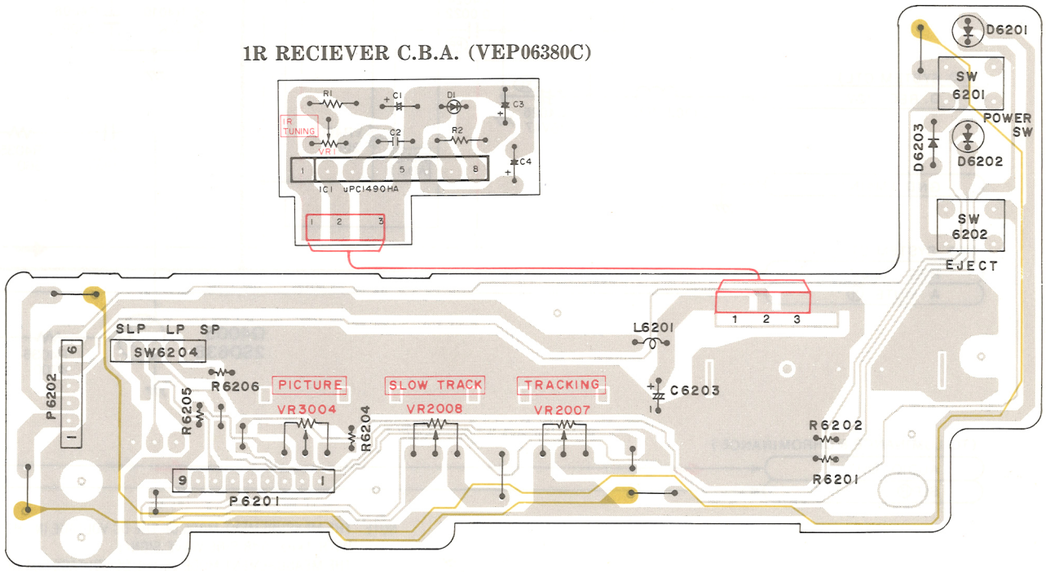

3-41. CH SELECT C.B.A. Section In Main C.B.A. (NV-G21PX/BR)

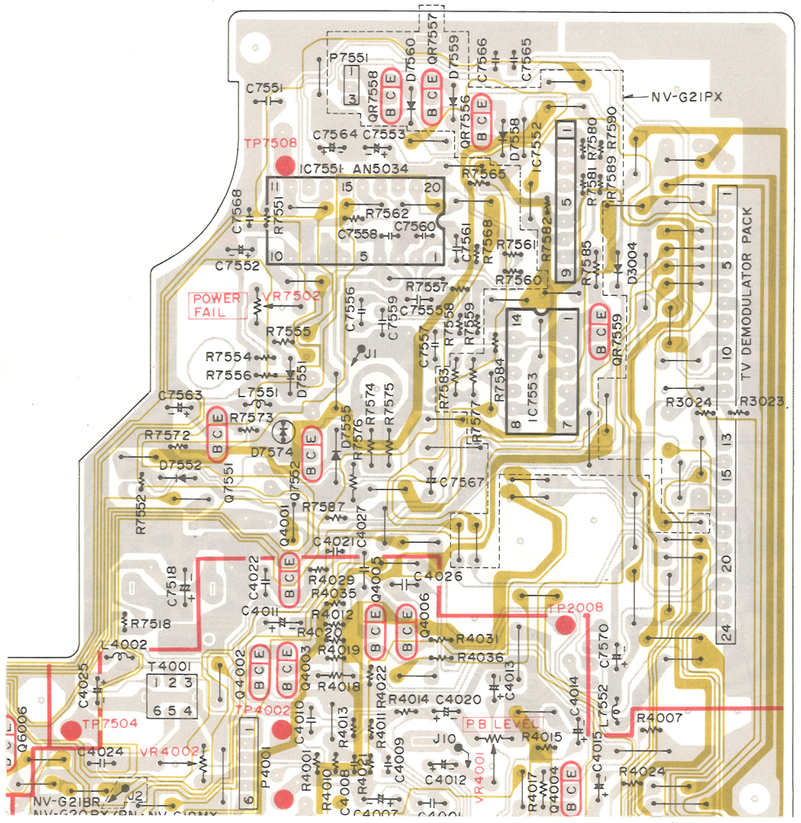

3-42. BUZZER PACK C.B.A. (VEP00H50A)

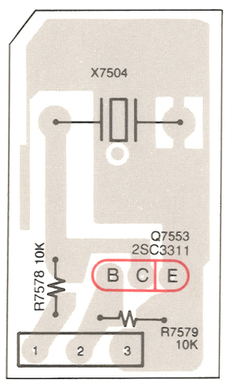

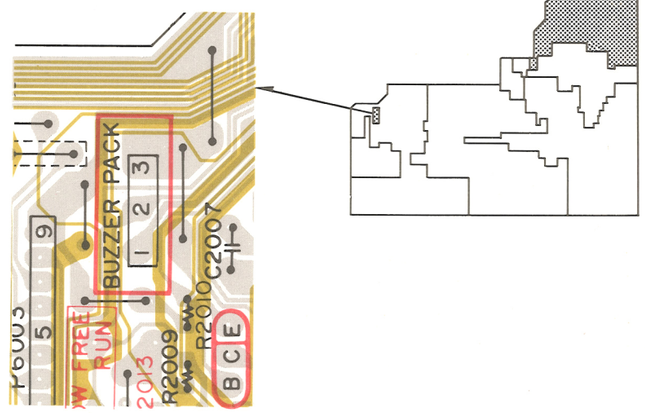

3-43. CH SELECT SCHEMATIC DIAGRAM (NV-G21PX)

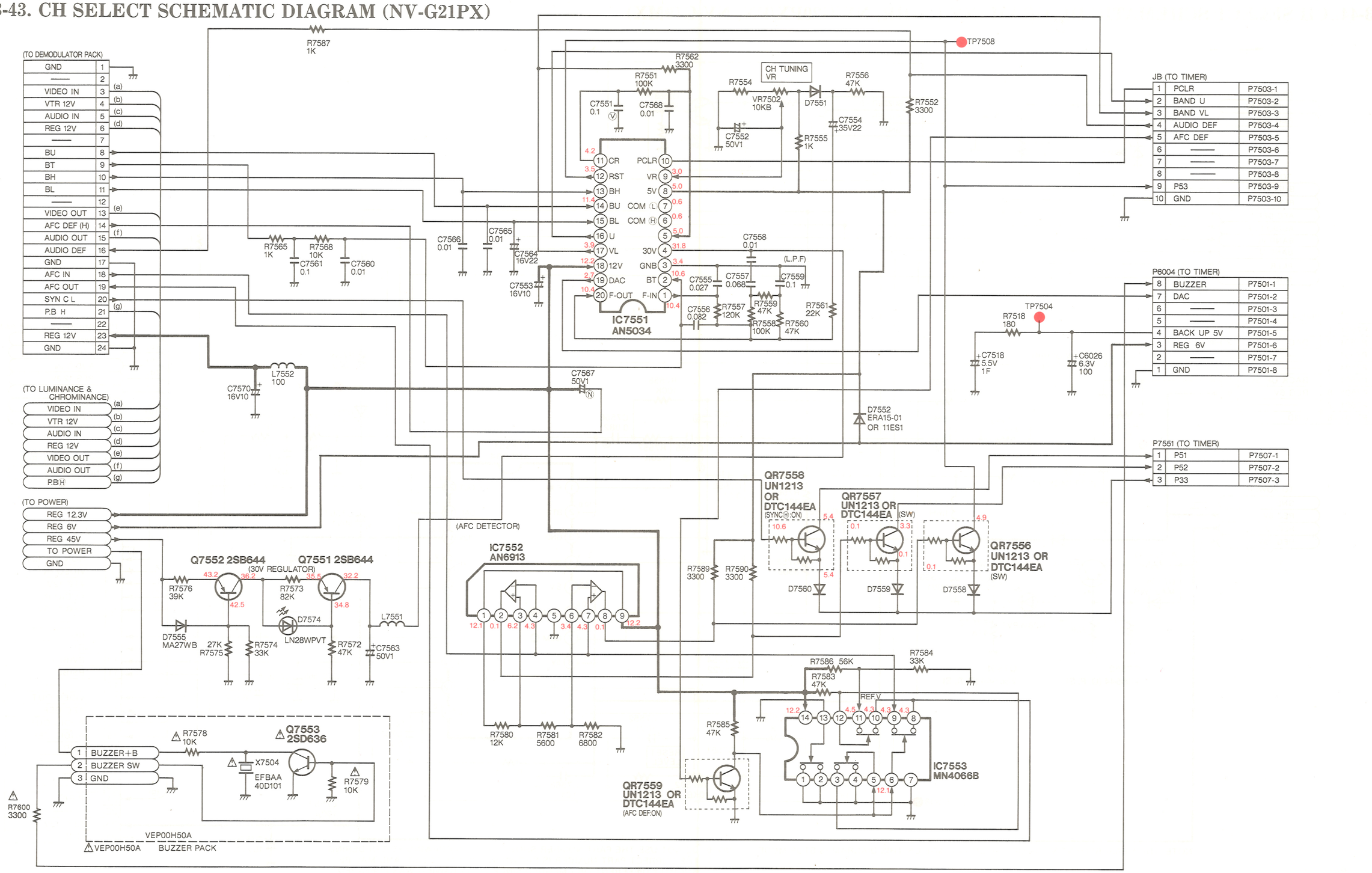

NOTE: THE MEASUREMENT MODE OF THE DC VOLTAGE ON THIS DIAGRAM IS STOP MODE.

NOTE: DO NOT USE THE PART NUMBER SHOWN ON THIS DRAWING FOR ORDERING. THE CORRECT PART NUMBER IS SHOWN IN THE PARTS LIST, AND MAY BE SLIGHTLY DIFFERENT OR AMENDED SINCE THIS DRAWING WAS PREPARED.

3—23

3-44. CH SELECT SCHEMATIC DIAGRAM (NV-G21BR, NV-G20PX/PN, NV-G19MX)

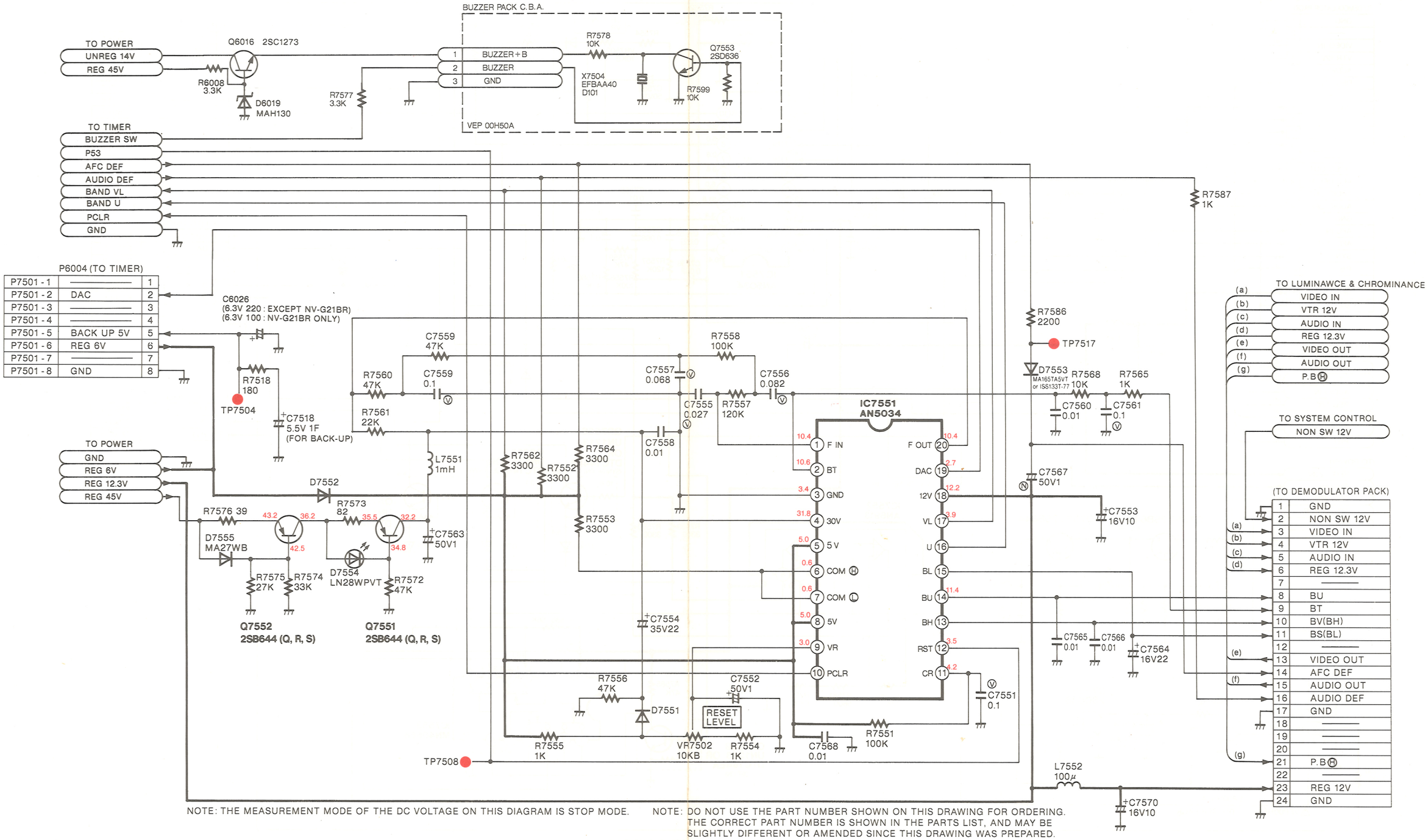

NOTE: THE MEASUREMENT MODE OF THE DC VOLTAGE ON THIS DIAGRAM IS STOP MODE.

NOTE: DO NOT USE THE PART NUMBER SHOWN ON THIS DRAWING FOR ORDERING. THE CORRECT PART NUMBER IS SHOWN IN THE PARTS LIST, AND MAY BE SLIGHTLY DIFFERENT OR AMENDED SINCE THIS DRAWING WAS PREPARED.

Back Page:
CH SELECT Section

3—24

3-45. CH SELECT Section In Main C.B.A.

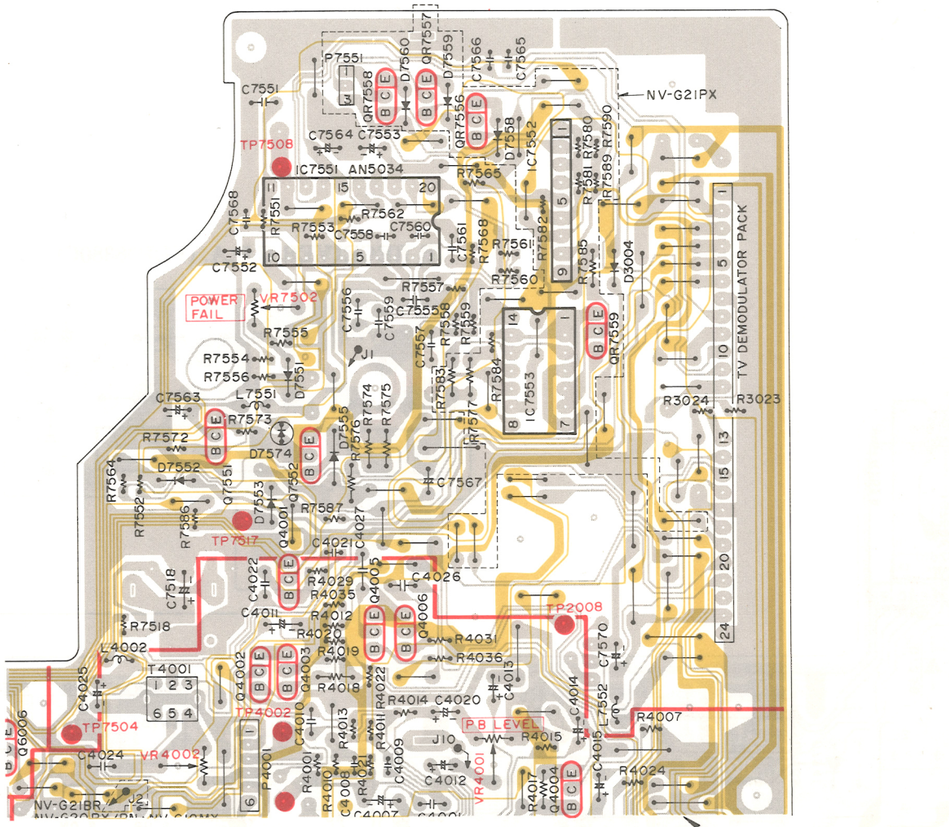

3-46. BUZZER PACK C.B.A. (VEP00H50A)

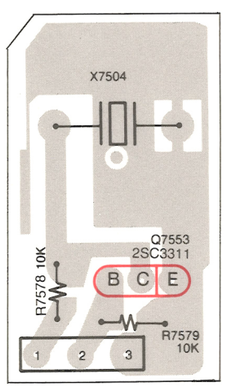

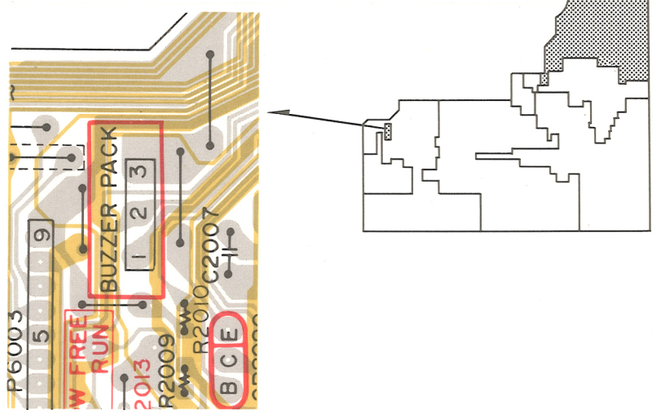

3-47. TIMER SCHEMATIC DIAGRAM

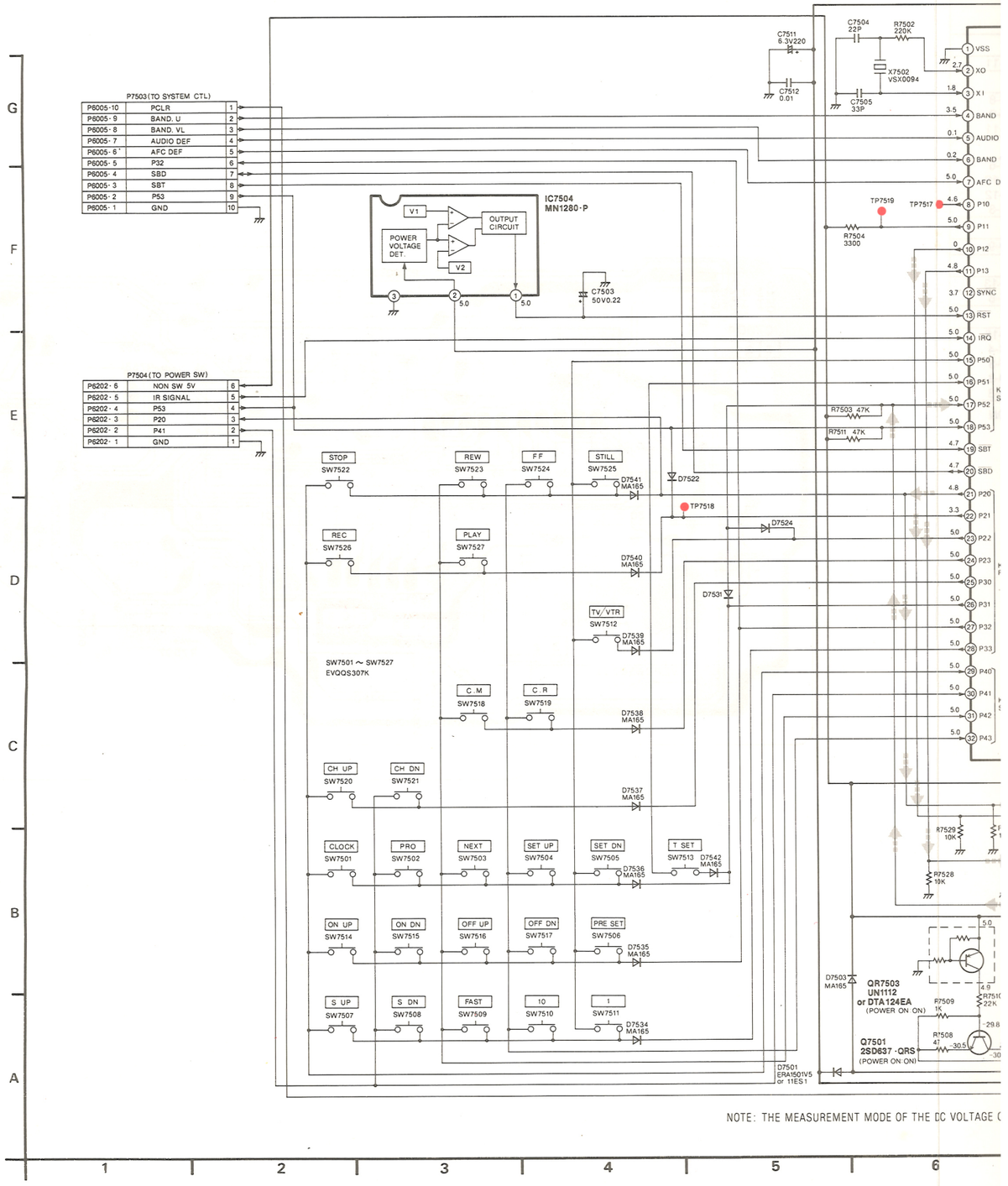

3-48. TIMER C.B.A. (VEP07401A:

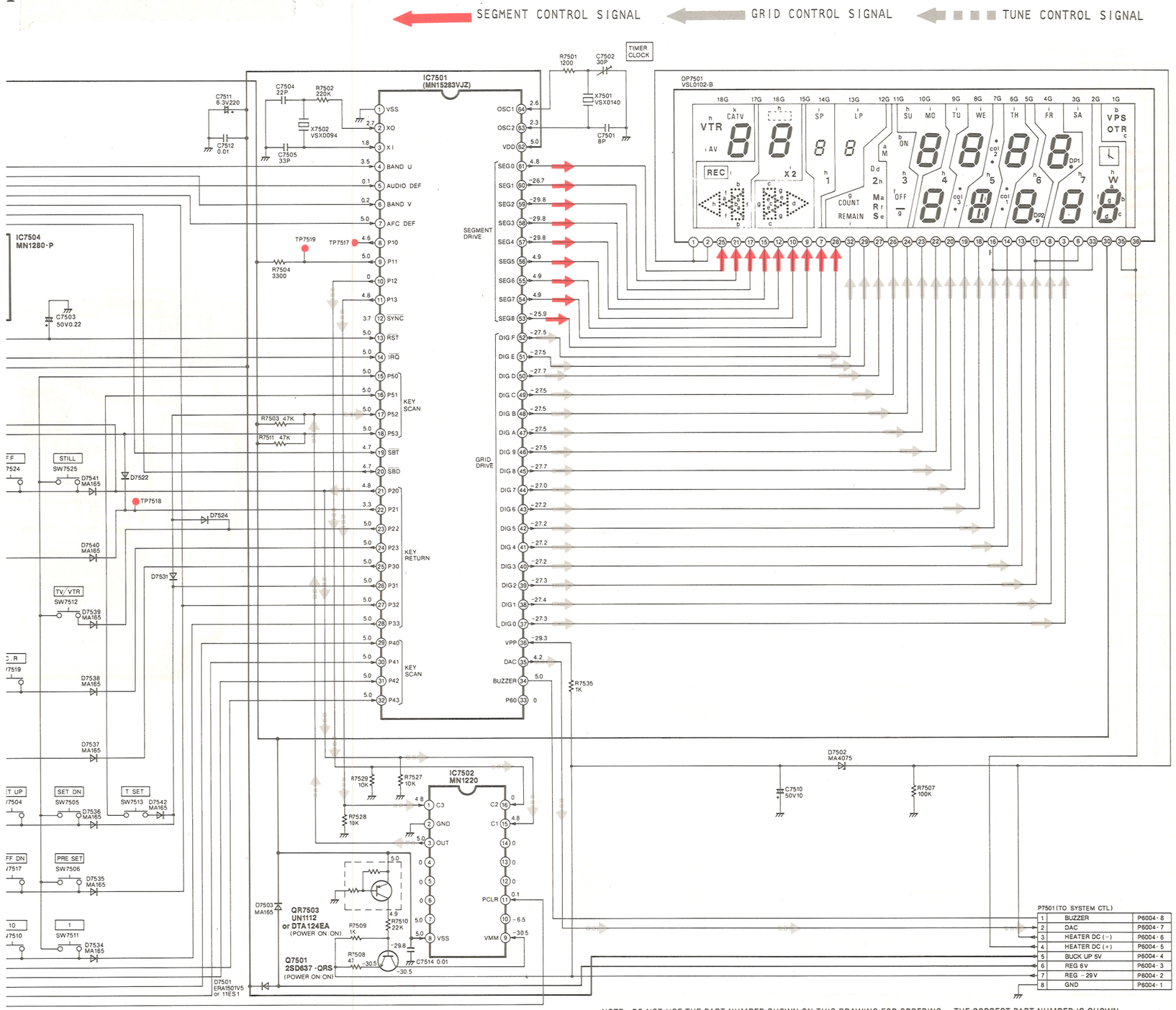

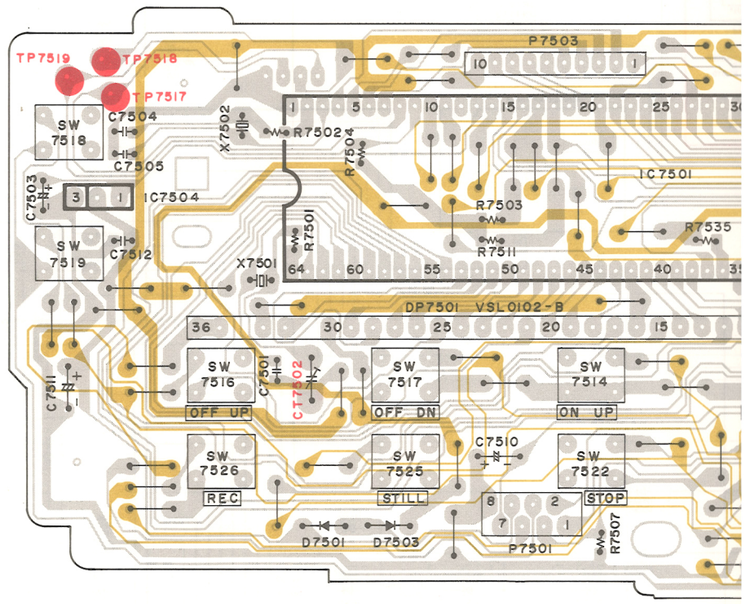

TIMER SCHEMATIC (20PX/PN,19MX)	
Transistor	
Q7501	A-6
Transistor & Resistor	
QR7503	A-6
Integrated Circuit	
IC7501	G-7
IC7502	B-7
IC7504	F-4
Test Point	
TP7517	F-6
TP7518	D-5
TP7519	F-6
Adjustment	
C7502	G-8
Connector	
P7501	A-11
P7503	G-1
P7504	E-1

ADDRESS INFORMATION

NOTE: THE MEASUREMENT MODE OF THE DC VOLTAGE ON THIS DIAGRAM IS STOP MODE.

NOTE: DO NOT USE THE PART NUMBER SHOWN ON THIS DRAWING FOR ORDERING. THE CORRECT PART NUMBER IS SHOWN IN THE PARTS LIST, AND MAY BE SLIGHTLY DIFFERENT OR AMENDED SINCE THIS DRAWING WAS PREPARED.

4 5 6 7 8 9 10 11 12

3-48. TIMER C.B.A. (VEP07401A: [redacted] 401C: NV-G20PN)

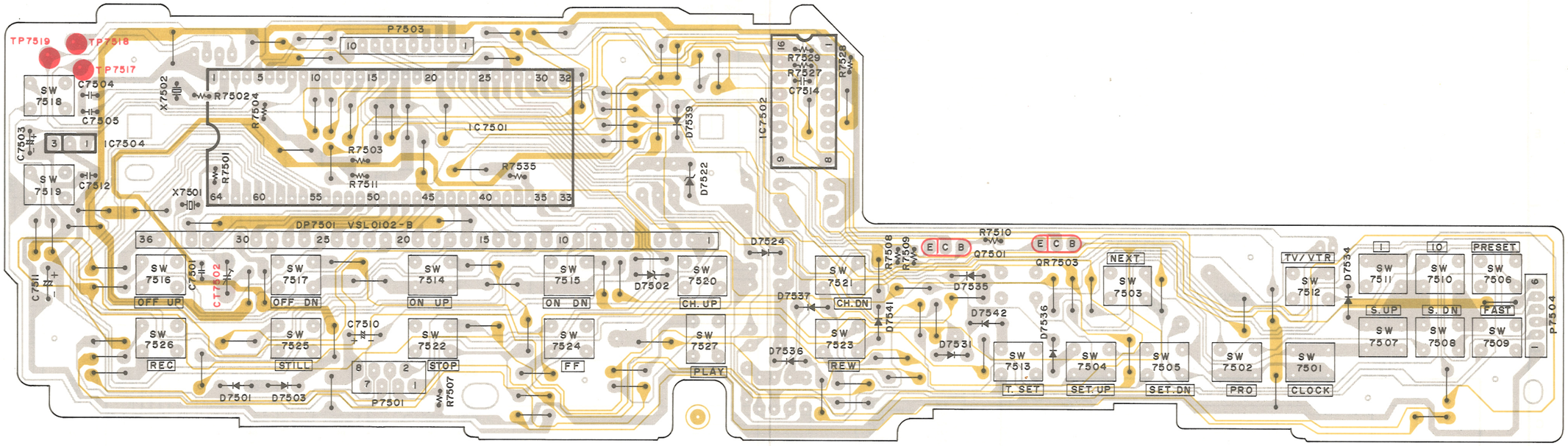

TIMER SCHEMATIC (20PX/PN,19MX)	
Transistor	
Q7501	A-6
Transistor & Resistor	
QR7503	A-6
Integrated Circuit	
IC7501	G-7
IC7502	B-7
IC7504	F-4
Test Point	
TP7517	F-6
TP7518	D-5
TP7519	F-6
Adjustment	
C7502	G-8
Connector	
P7501	A-11
P7503	G-1
P7504	E-1

ADDRESS INFORMATION

Next Page:
TIMER Section

3-49. TIMER SCHEMATIC DIAGRAM (NV-G21PX/BR)

SEGMENT CONTROL SIGNAL

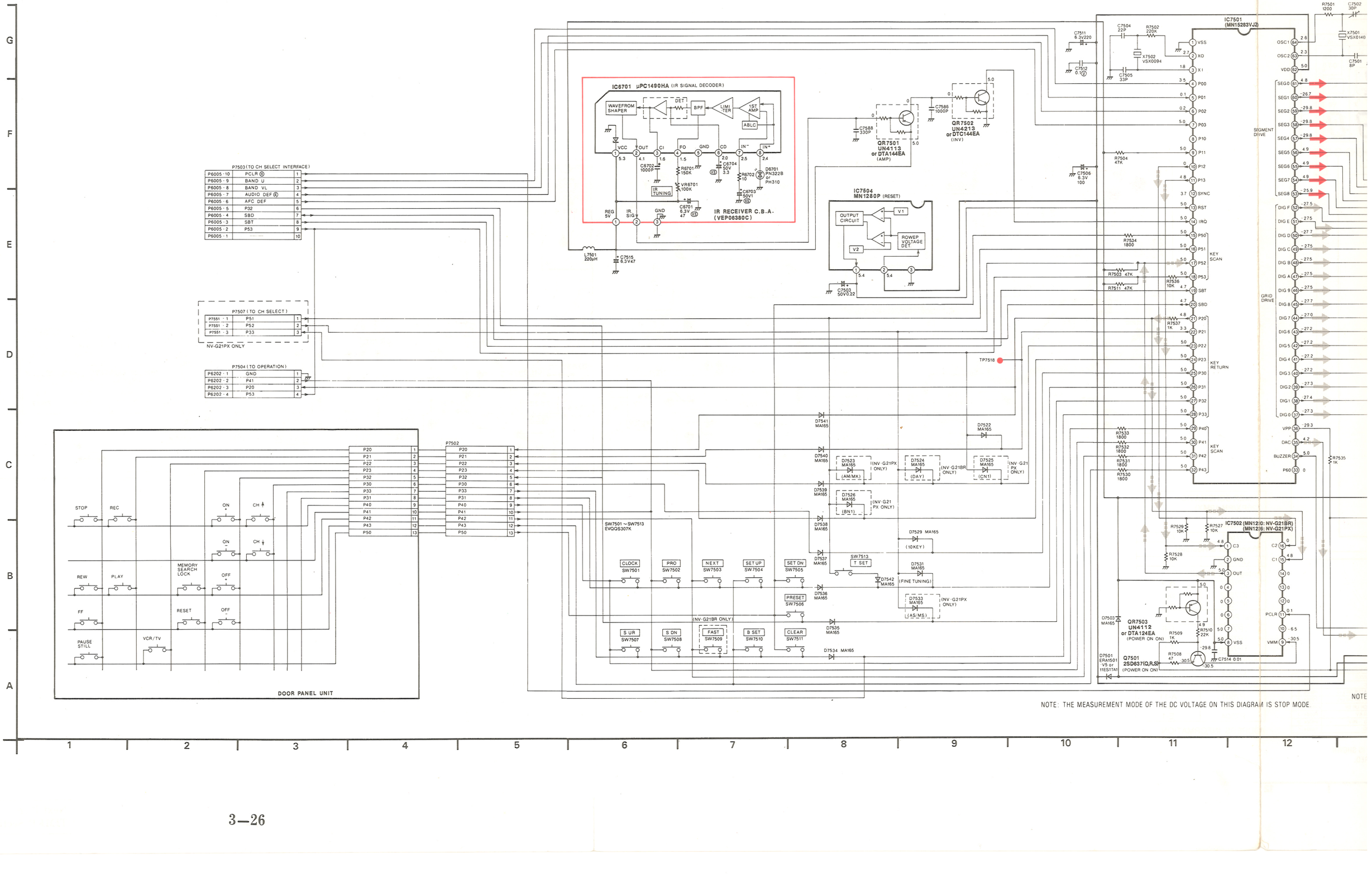

3-50. TIMER C.B.A. (VEP07402A: NV-G21PX) (VEP0740

SEGMENT CONTROL SIGNAL　GRID CONTROL SIGNAL　TUNE CONTROL SIGNAL

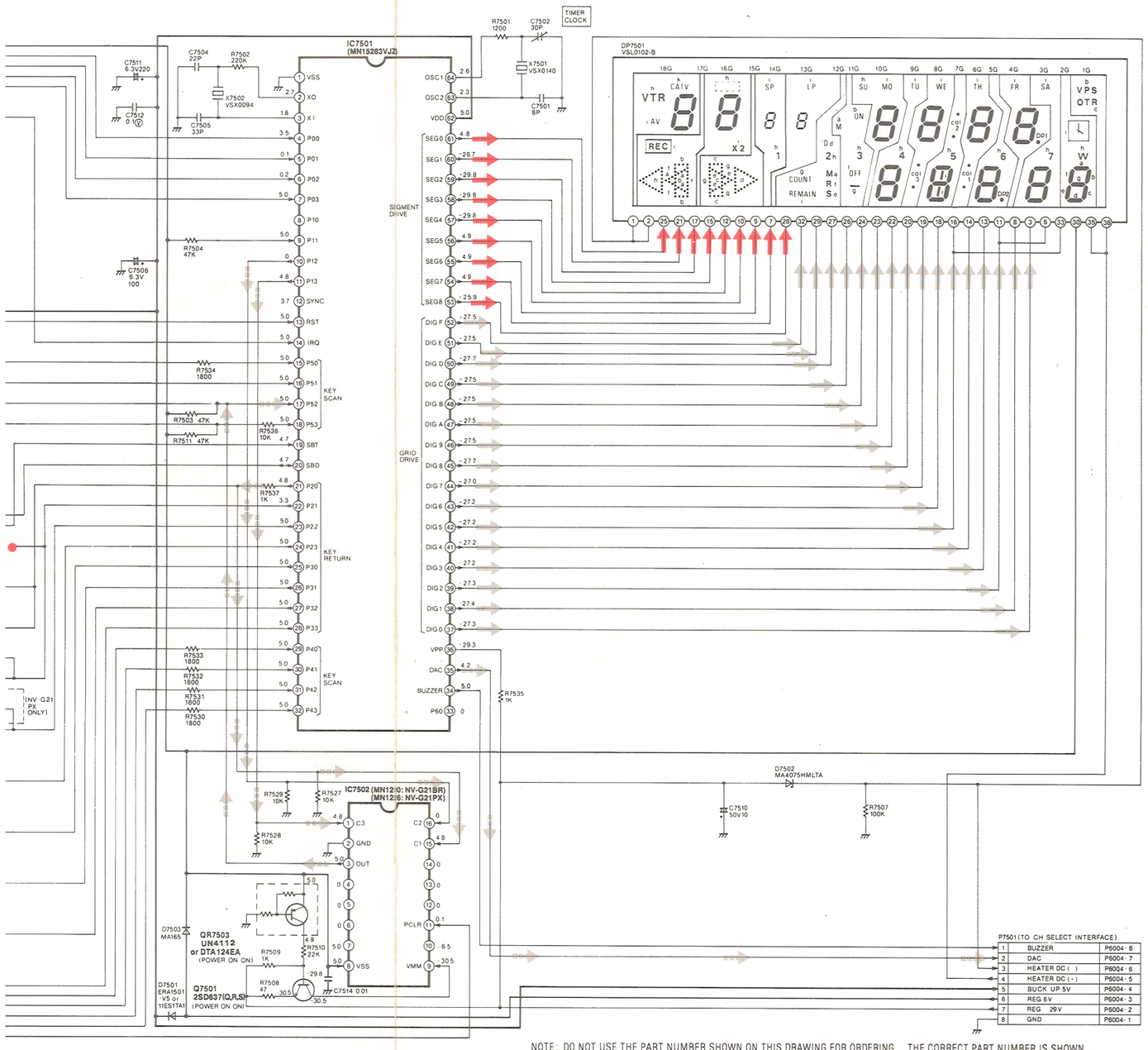

P7501 (TO CH SELECT INTERFACE)		
1	BUZZER	P6004 · 8
2	DAC	P6004 · 7
3	HEATER DC (·)	P6004 · 6
4	HEATER DC (·)	P6004 · 5
5	BUCK UP 5V	P6004 · 4
6	REG 6V	P6004 · 3
7	REG 29V	P6004 · 2
8	GND	P6004 · 1

TIMER SCHEMATIC (21PX/BR)	
Transistor	
Q7501	A-11
Transistor & Resistor	
QR7501	F-8
QR7502	F-9
QR7503	B-11
Integrated Circuit	
IC6701	F-6
IC7501	G-12
IC7502	B-12
IC7504	E-8
Test Point	
TP7518	D-9
Adjustment	
C7502	G-13
VR6701	F-6
Connector	
P7501	A-16
P7502	C-4
P7503	F-3
P7504	D-3
P7507	D-3

ADDRESS INFORMATION

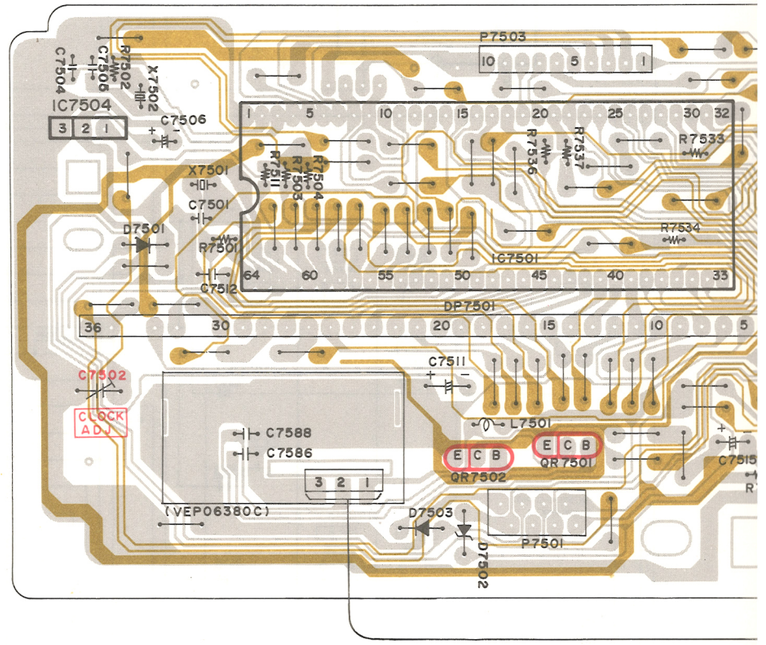

NOTE: THE MEASUREMENT MODE OF THE DC VOLTAGE ON THIS DIAGRAM IS STOP MODE.

NOTE: DO NOT USE THE PART NUMBER SHOWN ON THIS DRAWING FOR ORDERING. THE CORRECT PART NUMBER IS SHOWN IN THE PARTS LIST, AND MAY BE SLIGHTLY DIFFERENT OR AMENDED SINCE THIS DRAWING WAS PREPARED.

10　11　12　13　14　15　16

3-50. TIMER C.B.A. (VEP07402A: NV-G21PX) (VEP07402C: NV-G21BR)

IR RECEIVER C.B.A. (VEP06380C)

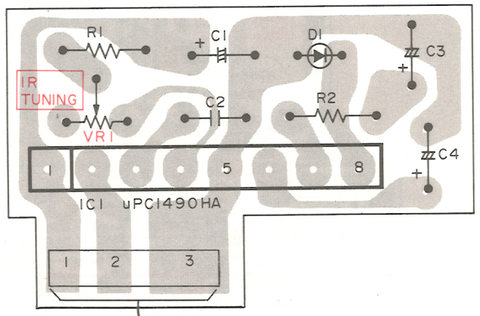

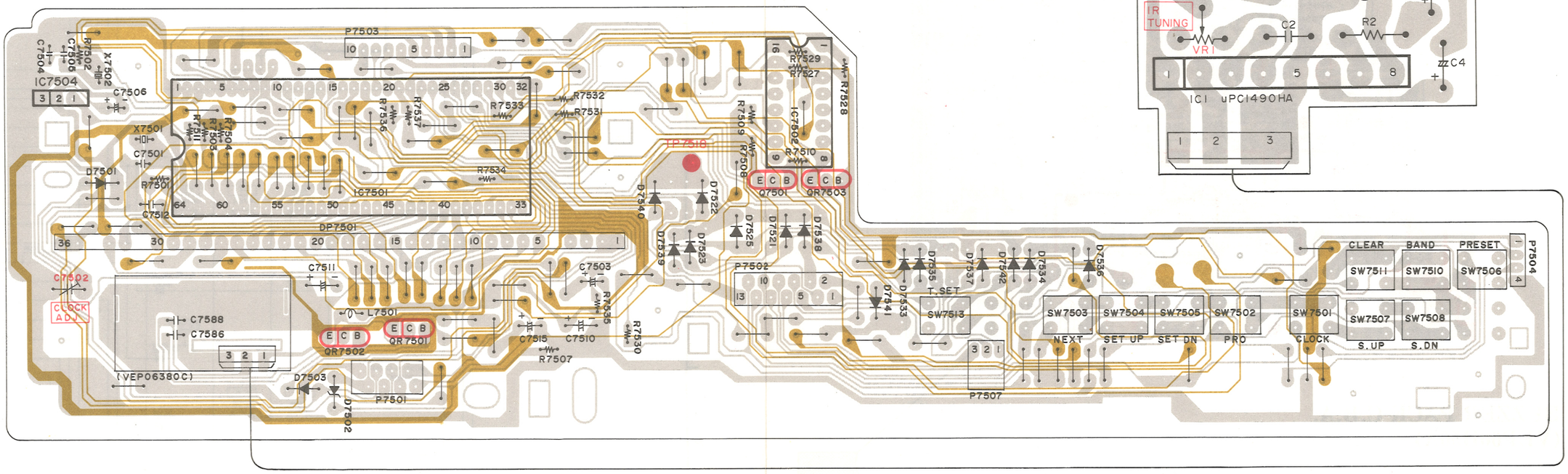

3-51. TV DEMODULATOR PACK & TUNER/ARU PACK SCHEMATIC DIAGRAM (NV-G21PX)

AUDIO SIGNAL PATH
VIDEO SIGNAL PATH

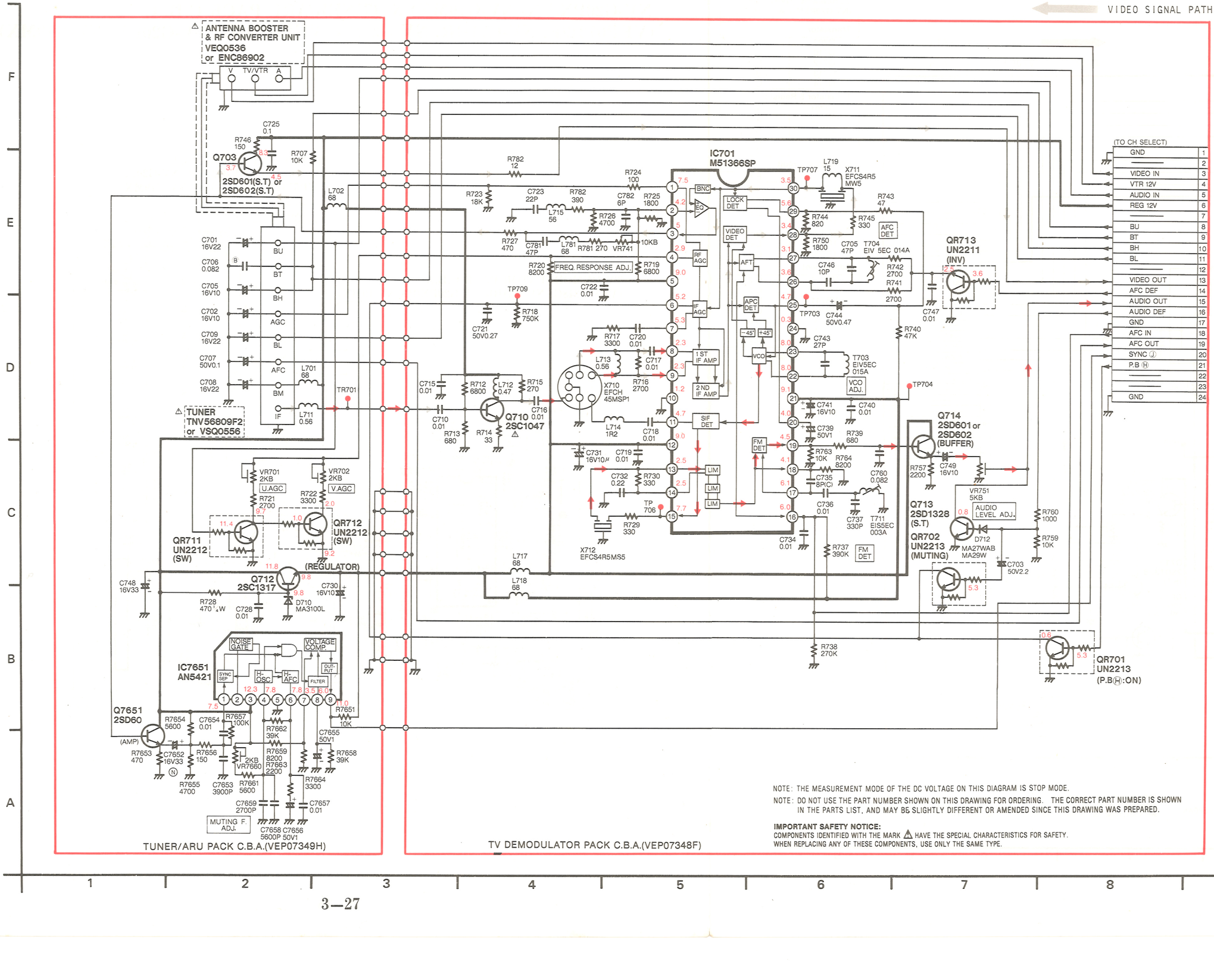

NOTE: THE MEASUREMENT MODE OF THE DC VOLTAGE ON THIS DIAGRAM IS STOP MODE.

NOTE: DO NOT USE THE PART NUMBER SHOWN ON THIS DRAWING FOR ORDERING. THE CORRECT PART NUMBER IS SHOWN IN THE PARTS LIST, AND MAY BE SLIGHTLY DIFFERENT OR AMENDED SINCE THIS DRAWING WAS PREPARED.

IMPORTANT SAFETY NOTICE:
COMPONENTS IDENTIFIED WITH THE MARK ⚠ HAVE THE SPECIAL CHARACTERISTICS FOR SAFETY.
WHEN REPLACING ANY OF THESE COMPONENTS, USE ONLY THE SAME TYPE.

TV DEMODULATOR SCHEMATIC (NV-G21PX)	
Transistor	
Q703	E-2
Q710	D-4
Q712	C-2
Q713	C-7
Q714	D-7
Q7651	B-1
Transistor & Resistor	
QR701	B-8
QR702	C-7
QR711	C-2
QR712	C-3
QR713	E-7
QR714	D-7
Integrated Circuit	
IC701	E-5
IC7651	B-2
Test Point	
TP701	D-3
TP703	E-6
TP704	D-7
TP706	C-5
TP707	E-6
TP709	E-4
Adjustment	
VR701	C-2
VR702	C-3
VR741	E-5
VR751	C-7
VR7660	A-2
T703	D-6
T704	E-6
T711	C-6

ADDRESS INFORMATION

C DIAGRAM (NV-G21PX)

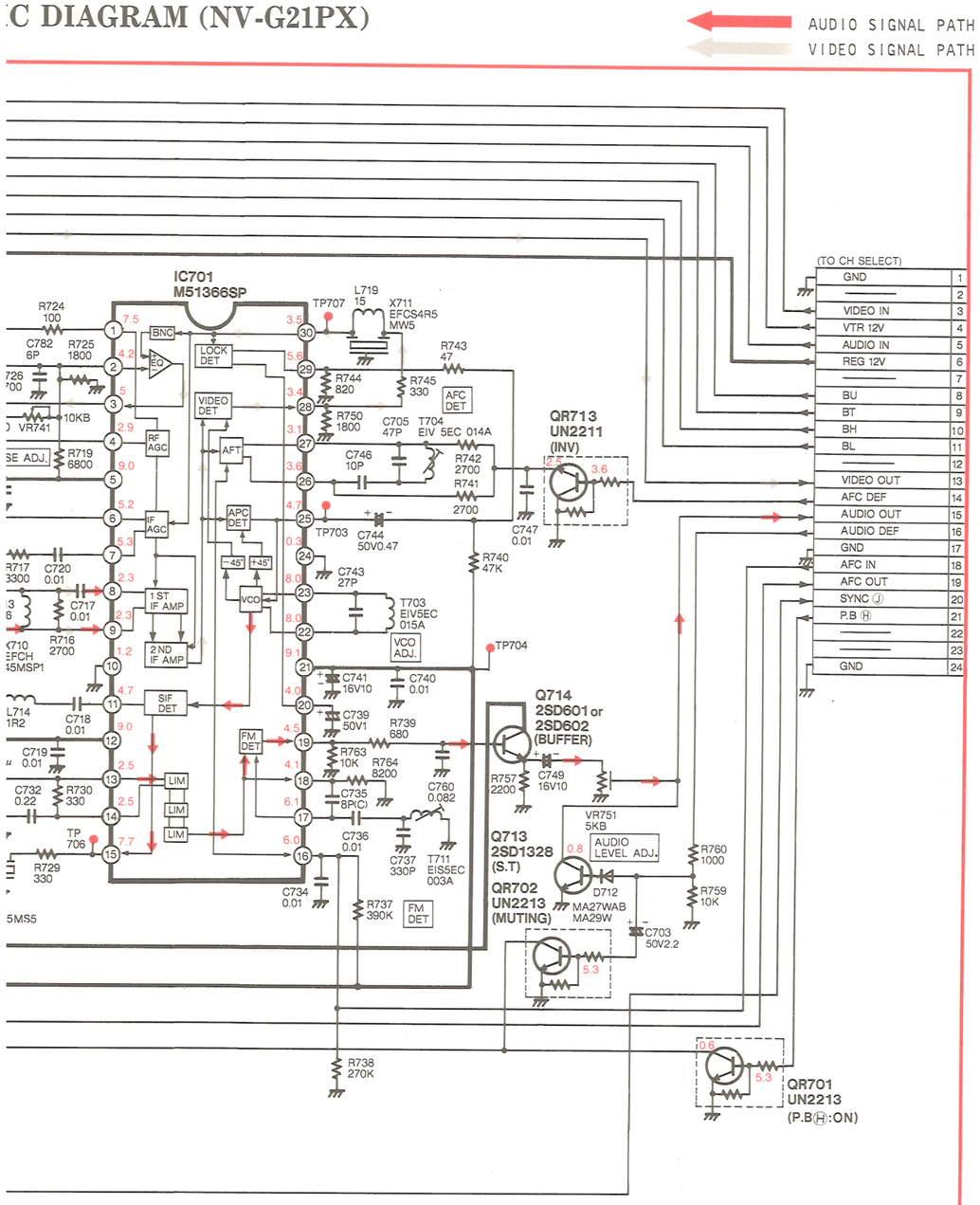

NOTE: THE MEASUREMENT MODE OF THE DC VOLTAGE ON THIS DIAGRAM IS STOP MODE.

NOTE: DO NOT USE THE PART NUMBER SHOWN ON THIS DRAWING FOR ORDERING. THE CORRECT PART NUMBER IS SHOWN IN THE PARTS LIST, AND MAY BE SLIGHTLY DIFFERENT OR AMENDED SINCE THIS DRAWING WAS PREPARED.

IMPORTANT SAFETY NOTICE:
COMPONENTS IDENTIFIED WITH THE MARK ⚠ HAVE THE SPECIAL CHARACTERISTICS FOR SAFETY.
WHEN REPLACING ANY OF THESE COMPONENTS, USE ONLY THE SAME TYPE.

K C.B.A.(VEP07348F)

5 6 7 8 9

TV DEMODULATOR SCHEMATIC (NV-G21PX)	
Transistor	
Q703	E-2
Q710	D-4
Q712	C-2
Q713	C-7
Q714	D-7
Q7651	B-1
Transistor & Resistor	
QR701	B-8
QR702	C-7
QR711	C-2
QR712	C-3
QR713	E-7
QR714	D-7
Integrated Circuit	
IC701	E-5
IC7651	B-2
Test Point	
TP701	D-3
TP703	E-6
TP704	D-7
TP706	C-5
TP707	E-6
TP709	E-4
Adjustment	
VR701	C-2
VR702	C-3
VR741	E-5
VR751	C-7
VR7660	A-2
T703	D-6
T704	E-6
T711	C-6

ADDRESS INFORMATION

3-52. TV DEMODULATOR PACK C.B.A. (VEP07348F: NV-G21PX) & TUNER/ARU PACK C.B.A. (VEP07349H: NV-G21PX)

TUNER ARU PACK C.B.A. (VEP07349H)

TV DEMODULATOR PACK C.B.A. (VEP07348F)

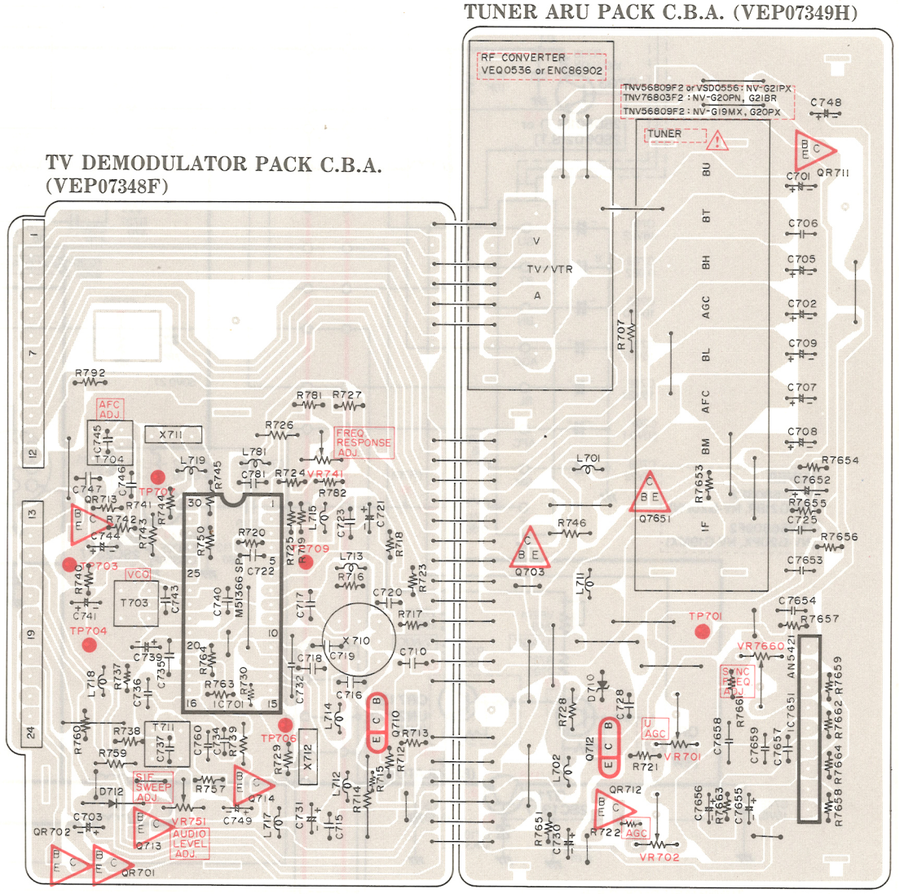

Next Page:
TV DEMODULATOR Section

3-53. TV DEMODULATOR PACK & TUNER/ARU PACK SCHEMATIC DIAGRAM (NV-G21BR, NV-G20PX/PN, NV-G19MX)

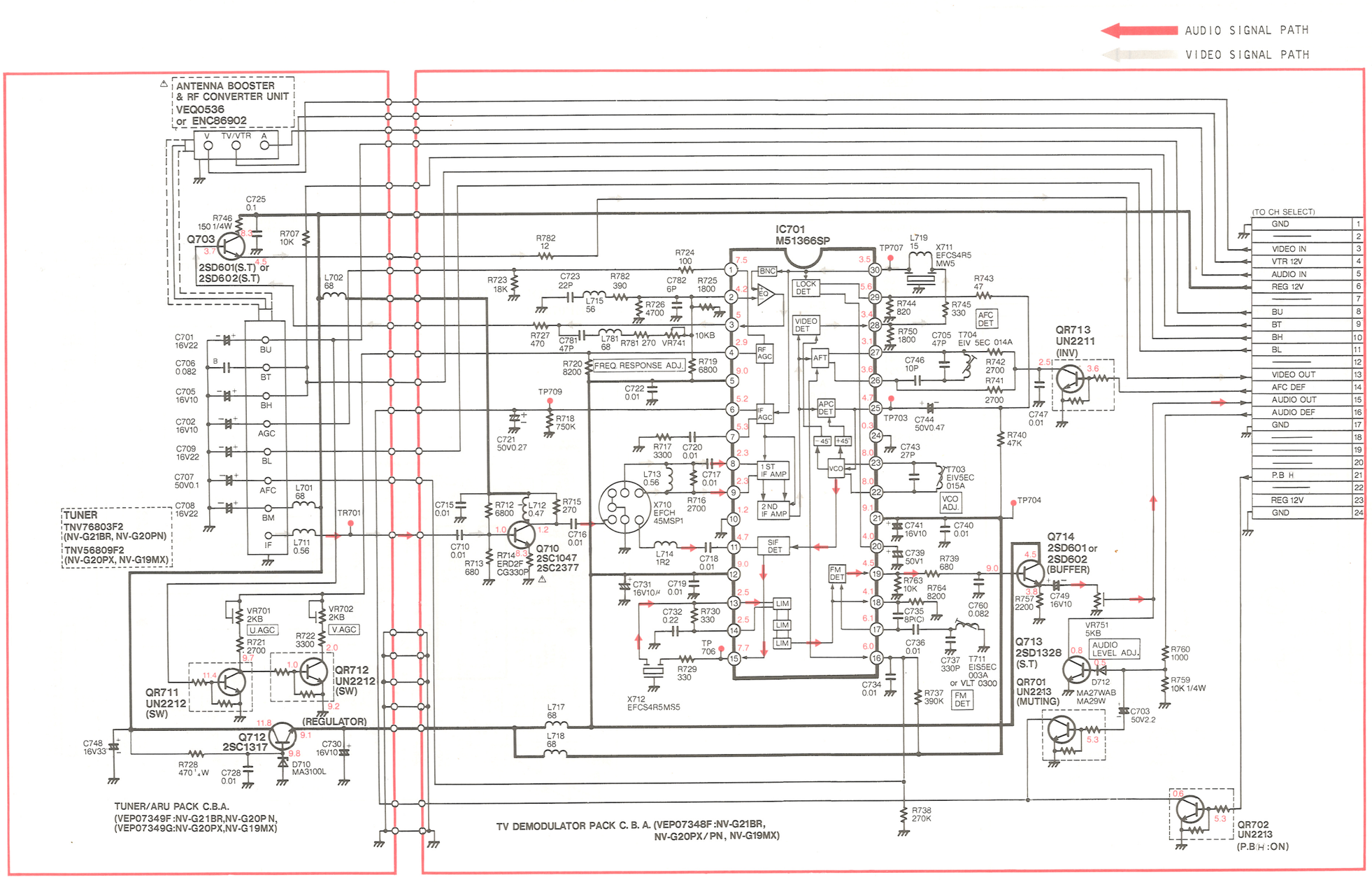

TV DEMODULATOR SCHEMATIC (NV-G21BR) (NV-G20PX/PN, NV-G19MX)	
Transistor	
Q703	E-2
Q710	C-4
Q712	B-3
Q713	B-7
Q714	C-7
Transistor & Resistor	
QR701	B-7
QR702	A-8
QR711	B-2
QR712	B-3
QR713	D-7
Integrated Circuit	
IC701	E-5
Test Point	
TP701	C-3
TP703	D-6
TP704	C-7
TP706	B-5
TP707	E-6
TP709	D-4
Adjustment	
VR701	C-2
VR702	C-3
VR741	D-5
VR751	C-7
T703	D-6
T704	D-6
T711	B-6

ADDRESS INFORMATION

NOTE: THE MEASUREMENT MODE OF THE DC VOLTAGE ON THIS DIAGRAM IS STOP MODE.

NOTE: DO NOT USE THE PART NUMBER SHOWN ON THIS DRAWING FOR ORDERING. THE CORRECT PART NUMBER IS SHOWN IN THE PARTS LIST, AND MAY BE SLIGHTLY DIFFERENT OR AMENDED SINCE THIS DRAWING WAS PREPARED.

IMPORTANT SAFETY NOTICE:
COMPONENTS IDENTIFIED WITH THE MARK ⚠ HAVE THE SPECIAL CHARACTERISTICS FOR SAFETY. WHEN REPLACING ANY OF THESE COMPONENTS, USE ONLY THE SAME TYPE.

DIAGRAM (NV-G21BR, NV-G20PX/PN, NV-G19MX)

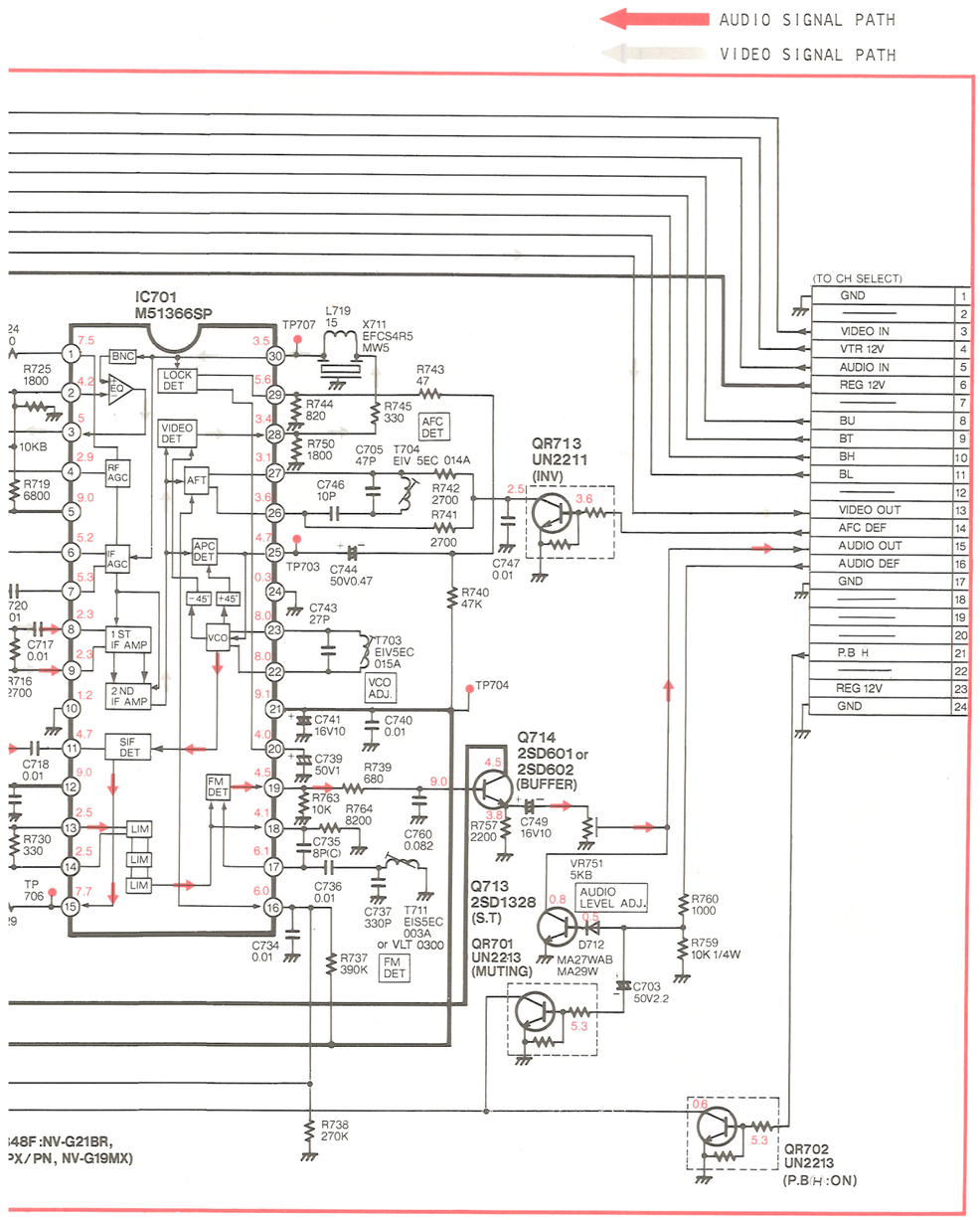

TV DEMODULATOR SCHEMATIC (NV-G21BR) (NV-G20PX/PN, NV-G19MX)	
Transistor	
Q703	E-2
Q710	C-4
Q712	B-3
Q713	B-7
Q714	C-7
Transistor & Resistor	
QR701	B-7
QR702	A-8
QR711	B-2
QR712	B-3
QR713	D-7
Integrated Circuit	
IC701	E-5
Test Point	
TP701	C-3
TP703	D-6
TP704	C-7
TP706	B-5
TP707	E-6
TP709	D-4
Adjustment	
VR701	C-2
VR702	C-3
VR741	D-5
VR751	C-7
T703	D-6
T704	D-6
T711	B-6

ADDRESS INFORMATION

E DC VOLTAGE ON THIS DIAGRAM IS STOP MODE.
SHOWN ON THIS DRAWING FOR ORDERING. THE CORRECT PART NUMBER IS SHOWN
E SLIGHTLY DIFFERENT OR AMENDED SINCE THIS DRAWING WAS PREPARED.

IMPORTANT SAFETY NOTICE:
COMPONENTS IDENTIFIED WITH THE MARK ⚠ HAVE THE SPECIAL CHARACTERISTICS FOR SAFETY.
WHEN REPLACING ANY OF THESE COMPONENTS, USE ONLY THE SAME TYPE.

5 6 7 8 9

3-54. TV DEMODULATOR PACK C.B.A. (VEP07348G: NV-G21BR, NV-G20PX/PN, NV-G19MX) & TUNER/ARU PACK C.B.A. (VEP07349F: NV-G21BR, NV-G20PN, VEP07349G: NV-G20PX, NV-G19MX)

TUNER ARU PACK C.B.A.
(VEP07349F: NV-G21BR, NV-G20PN,
VEP07349G:NV-G20PX, NV-G19MX)

TV DEMODULATOR PACK C.B.A.
(VEP07348G: NV-G21BR,NV-G20PX/PN,NV-19MX)

3-55. RF CONVERTER SCHEMATIC DIAGRAM

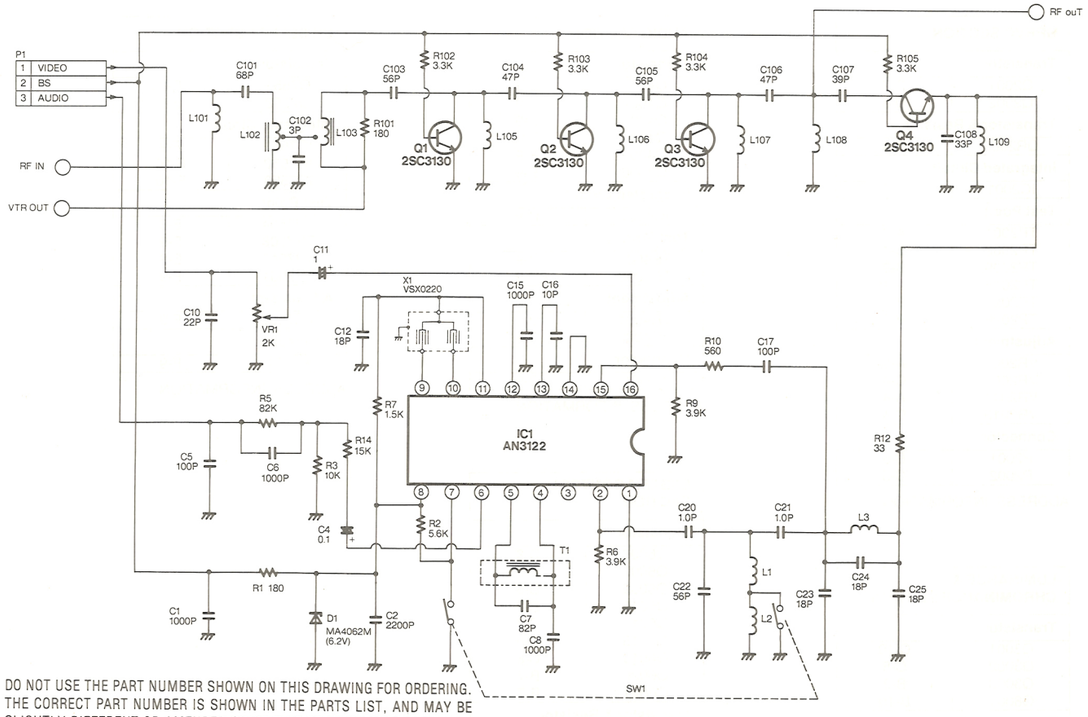

NOTE: DO NOT USE THE PART NUMBER SHOWN ON THIS DRAWING FOR ORDERING. THE CORRECT PART NUMBER IS SHOWN IN THE PARTS LIST, AND MAY BE SLIGHTLY DIFFERENT OR AMENDED SINCE THIS DRAWING WAS PREPARED.

3-56. RF CONVERTER C.B.A. (VEQ0536)

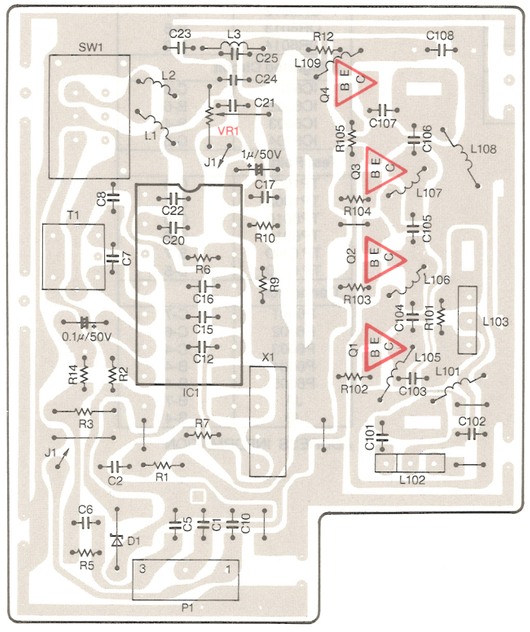

3-57. PROGRAMMABLE REMOTE CONTROL UNIT SCHEMATIC DIAGRAM (NV-G21PX)

—UNIT NO: VEQ0535 (NV-G21PX)—

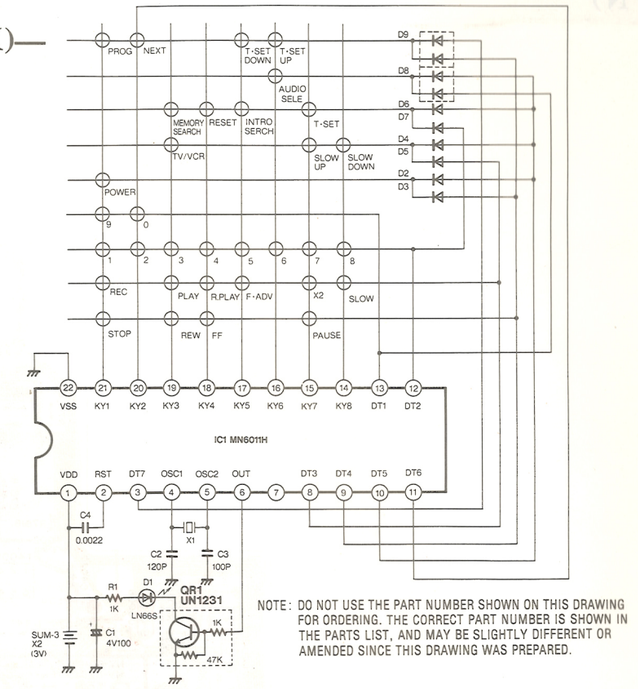

NOTE: DO NOT USE THE PART NUMBER SHOWN ON THIS DRAWING FOR ORDERING. THE CORRECT PART NUMBER IS SHOWN IN THE PARTS LIST, AND MAY BE SLIGHTLY DIFFERENT OR AMENDED SINCE THIS DRAWING WAS PREPARED.

3-58. PROGRAMMABLE REMOTE CONTROL UNIT C.B.A. (VEP66017A)

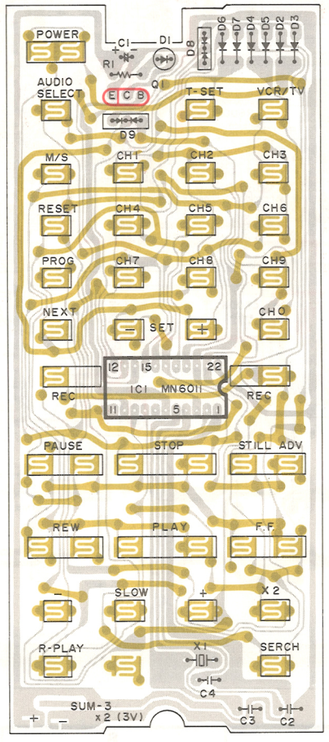

RF ouT

L109

3-57. PROGRAMMABLE REMOTE CONTROL UNIT SCHEMATIC DIAGRAM (NV-G21PX)

—UNIT NO: VEQ0535 (NV-G21PX)—

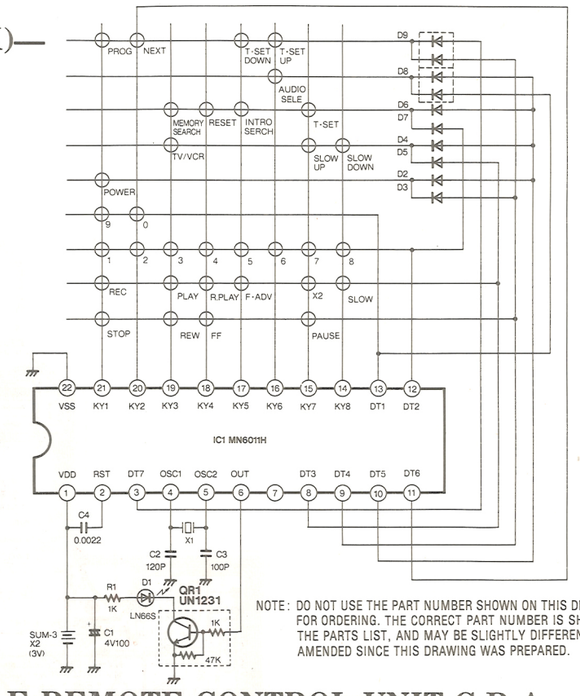

NOTE: DO NOT USE THE PART NUMBER SHOWN ON THIS DRAWING FOR ORDERING. THE CORRECT PART NUMBER IS SHOWN IN THE PARTS LIST, AND MAY BE SLIGHTLY DIFFERENT OR AMENDED SINCE THIS DRAWING WAS PREPARED.

3-58. PROGRAMMABLE REMOTE CONTROL UNIT C.B.A. (VEP66017A)

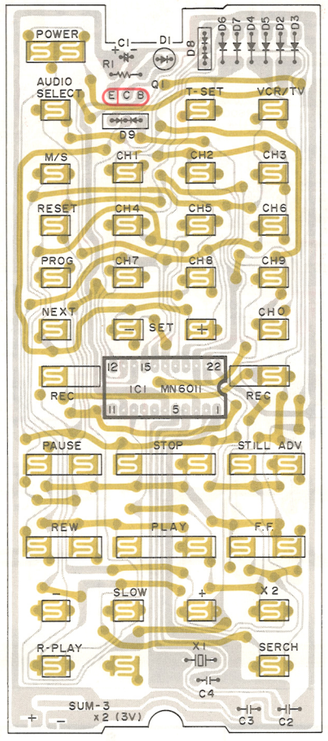

3-59. PROGRAMMABLE REMOTE CONTROL UNIT SCHEMATIC DIAGRAM

—UNIT NO: VEQ0565 (NV-G21BR)—

—UNIT NO: VEQ0559 (NV-G20PX, NV-G19MX)—

—UNIT NO: VEQ0560 (NV-G20PN)—

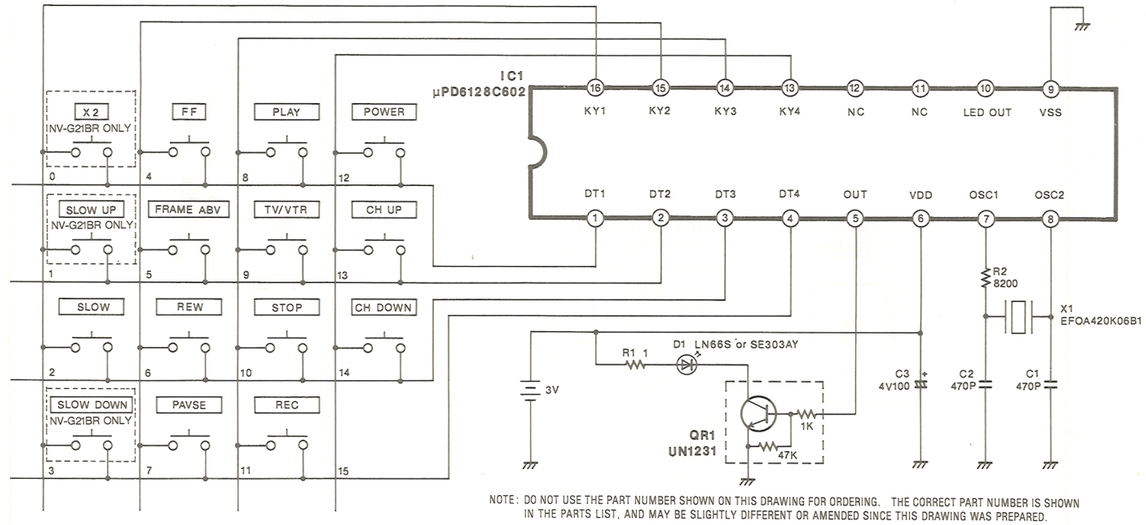

NOTE: DO NOT USE THE PART NUMBER SHOWN ON THIS DRAWING FOR ORDERING. THE CORRECT PART NUMBER IS SHOWN IN THE PARTS LIST, AND MAY BE SLIGHTLY DIFFERENT OR AMENDED SINCE THIS DRAWING WAS PREPARED.

3-60. PROGRAMMABLE REMOTE CONTROL UNIT C.B.A. (VEP22063C)

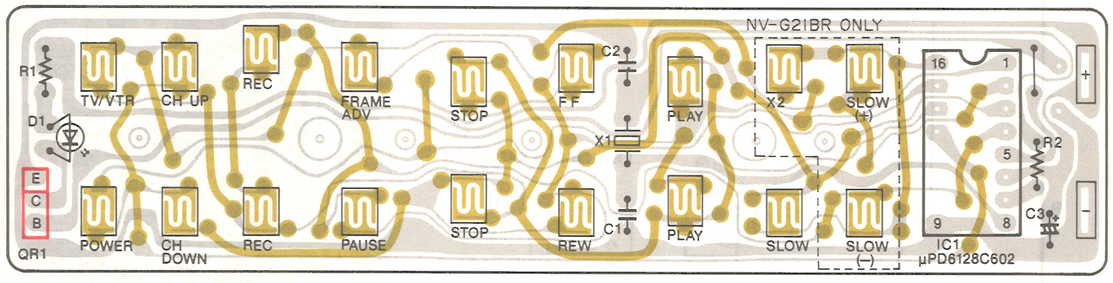

Next Page:
MAIN C.B.A. Section

3-61. MAIN C.B.A. (VEP03407A: NV-G21PX, VEP03407E: NV-G21BR)
(VEP03407B:

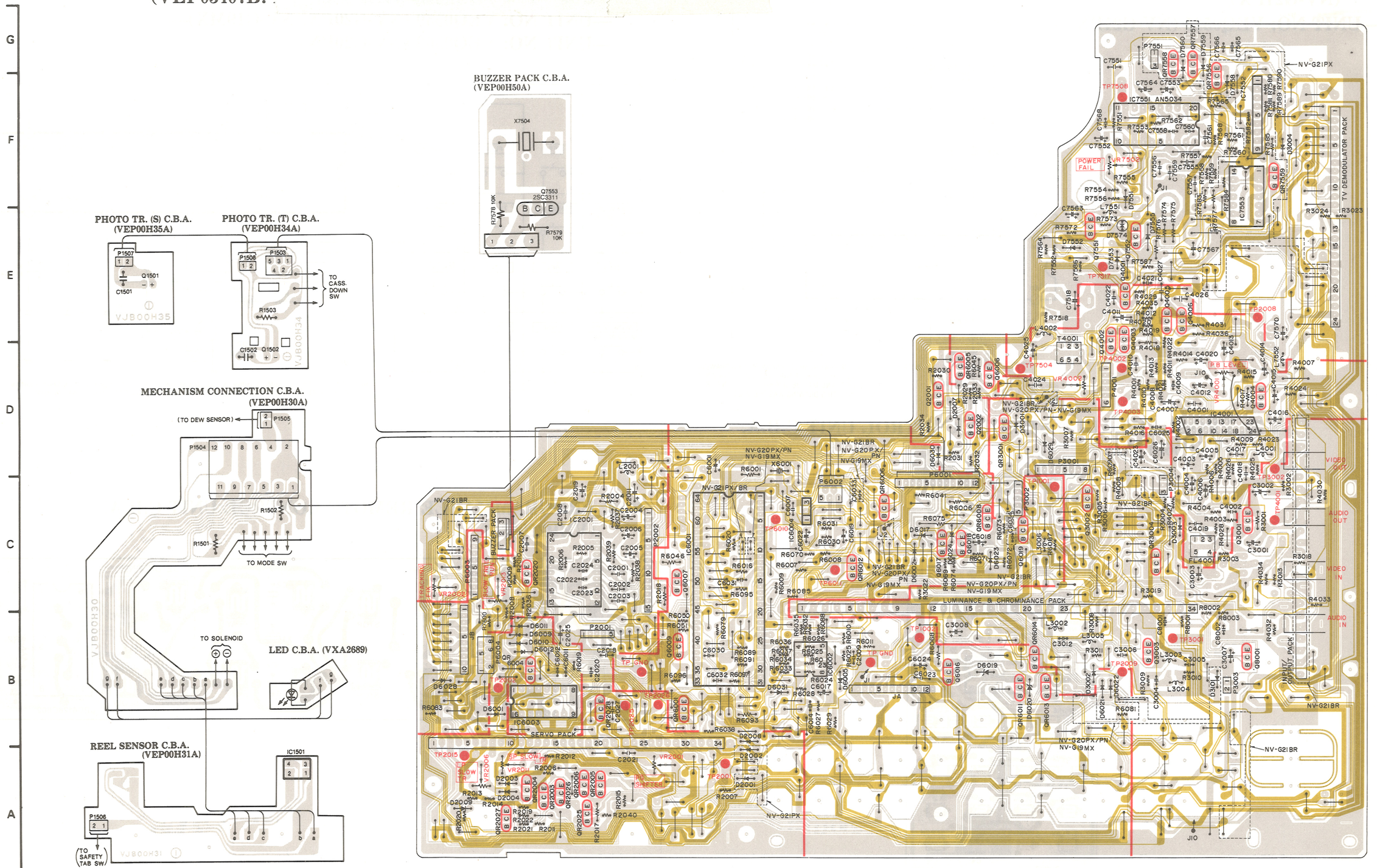

MAIN

SERVO SE
Transistor
Q2001
Q2002
Transistor
QR2002
Integrated
IC2001
Test Point
TP2001
TP2002
TP2009
TP2015
TP2025
TP2026
Adjustmer
VR2001
VR2002
VR2011
VR2013
Connecto
P2001
P2002

ADDRESS I

LUMINAN CHROMIN
Transistor
Q3001
Q3002
Q3003
Q8001
Transistor
QR3001
QR3004
Test Point
TP3001
TP3002
TP4001
Adjustmer
VR3012
Connecto
P3001
P3002
P3003

ADDRESS I

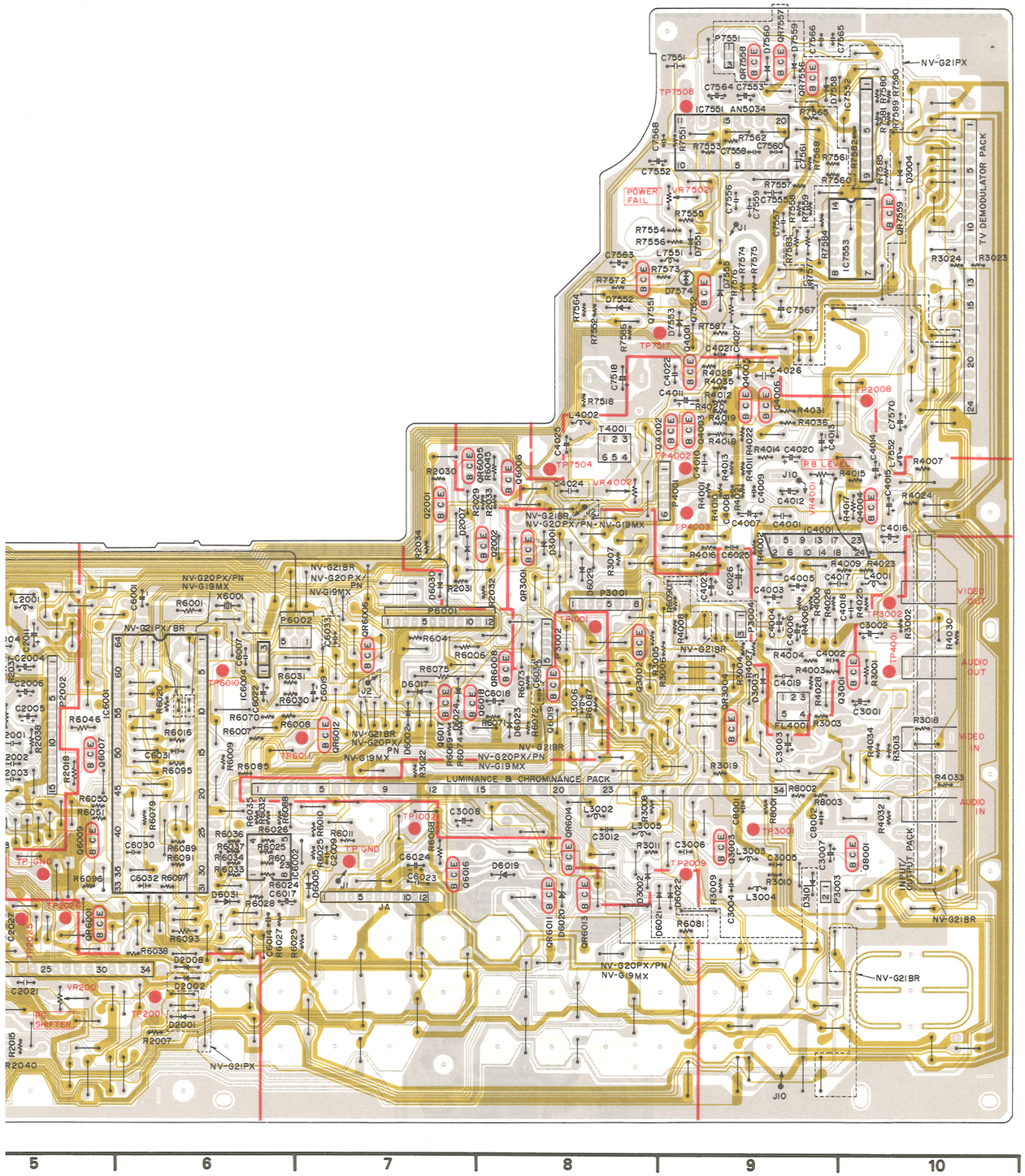

MAIN C.B.A. ADDRESS INFORMATIONS

SERVO SECTION	
Transistor	
Q2001	D-7
Q2002	D-8
Transistor & Resistor	
QR2002	C-4
Integrated Circuit	
IC2001	C-5
Test Point	
TP2001	A-6
TP2002	B-4
TP2009	B-9
TP2015	A-4
TP2025	B-5
TP2026	B-5
Adjustment	
VR2001	A-5
VR2002	C-4
VR2011	A-4
VR2013	C-4
Connector	
P2001	B-5
P2002	C-5

ADDRESS INFORMATION

LUMINANCE & CHROMINANCE SECTION	
Transistor	
Q3001	C-10
Q3002	C-8
Q3003	B-9
Q8001	B-10
Transistor & Resistor	
QR3001	D-8
QR3004	C-9
Test Point	
TP3001	C-9
TP3002	D-10
TP4001	C-10
Adjustment	
VR3012	B-9
Connector	
P3001	D-8
P3002	C-8
P3003	B-9

ADDRESS INFORMATION

AUDIO SECTION	
Transistor	
Q4001	E-9
Q4002	E-9
Q4003	E-9
Q4004	D-10
Q4005	E-9
Q4006	E-9
Integrated Circuit	
IC4001	D-9
Test Point	
TP4002	D-9
TP4003	D-9
Adjustment	
VR4001	D-9
VR4002	D-8
Connector	
P4001	D-9

ADDRESS INFORMATION

CH SELECT SECTION	
Transistor	
Q7551	E-8
Q7552	E-9
Integrated Circuit	
IC7551	F-9
IC7552	F-10
IC7553	F-10
Test Point	
TP7504	E-8
TP7508	F-9
TP7517	E-9
TP7551	F-9
Adjustment	
VR7502	F-9
Connector	
P7551	F-9

ADDRESS INFORMATION

SYSTEM CONTROL SECTION	
Transistor	
Q6006	D-8
Q6007	C-5
Q6009	B-5
Q6016	B-7
Q6017	C-7
Q6018	C-8
Q6019	C-8
Q6020	B-7
Q6021	B-7
Transistor & Resistor	
QR6001	B-5
QR6002	B-8
QR6004	B-4
QR6005	D-7
QR6006	C-7
QR6008	C-8
QR6011	B-8
QR6012	C-7
QR6013	B-8
QR6014	B-8
Integrated Circuit	
IC6001	C-6
IC6002	B-6
IC6003	B-4
IC6004	C-6
Test Point	
TP1001	C-8
TP1002	B-7
TP6010	C-6
TP6011	C-6
TP GND	B-7
TP GND	B-5
Connector	
P6001	C-7
P6002	C-6
P6003	C-4
P6004	B-4
P6005	B-4
JA	B-7
JB	B-4

ADDRESS INFORMATION

3-62. CIRCUIT BOARD LAYOUT

FRONT VIEW

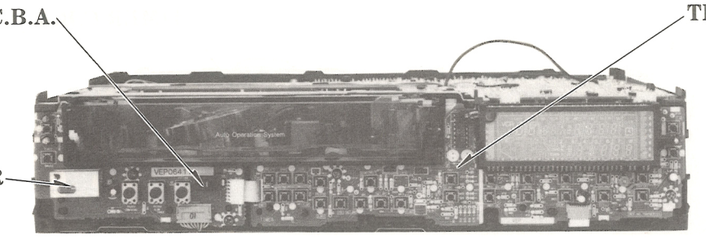

TOP VIEW (1)

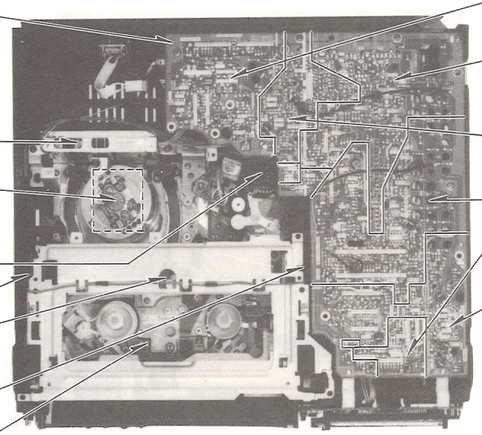

TOP VIEW (2)

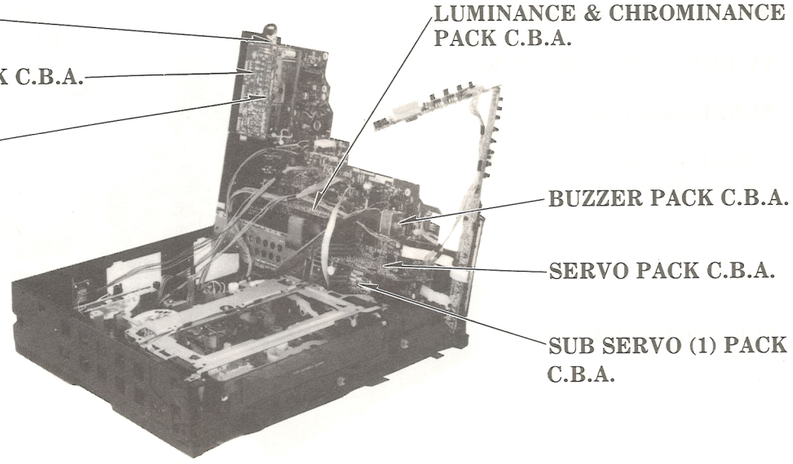

3-63. INTERCONNECTION SCHEMATIC DIAGRAM (NV-G20PX/PN, NV-G

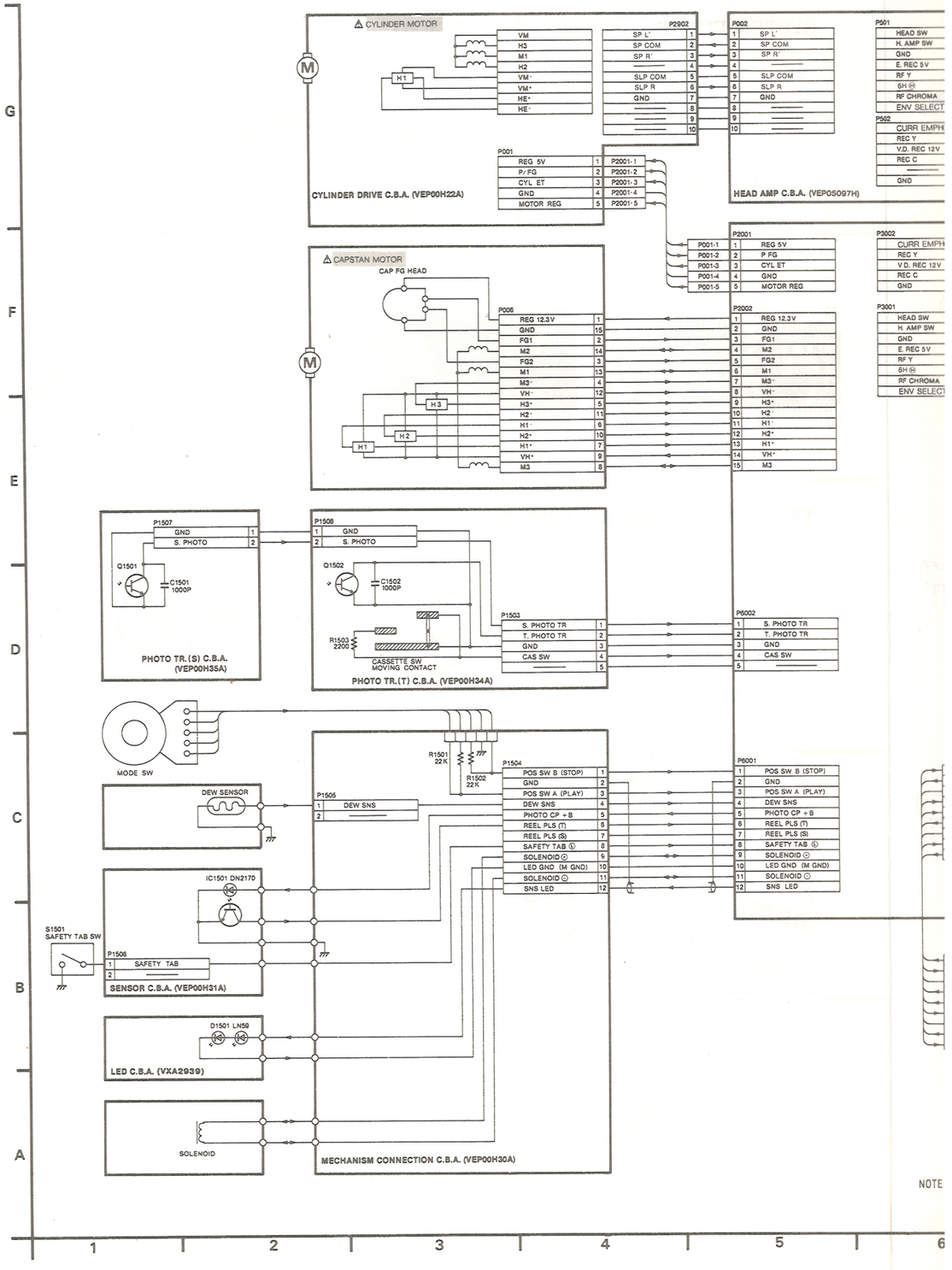

3-63. INTERCONNECTION SCHEMATIC DIAGRAM (NV-G20PX/PN, NV-G19MX)

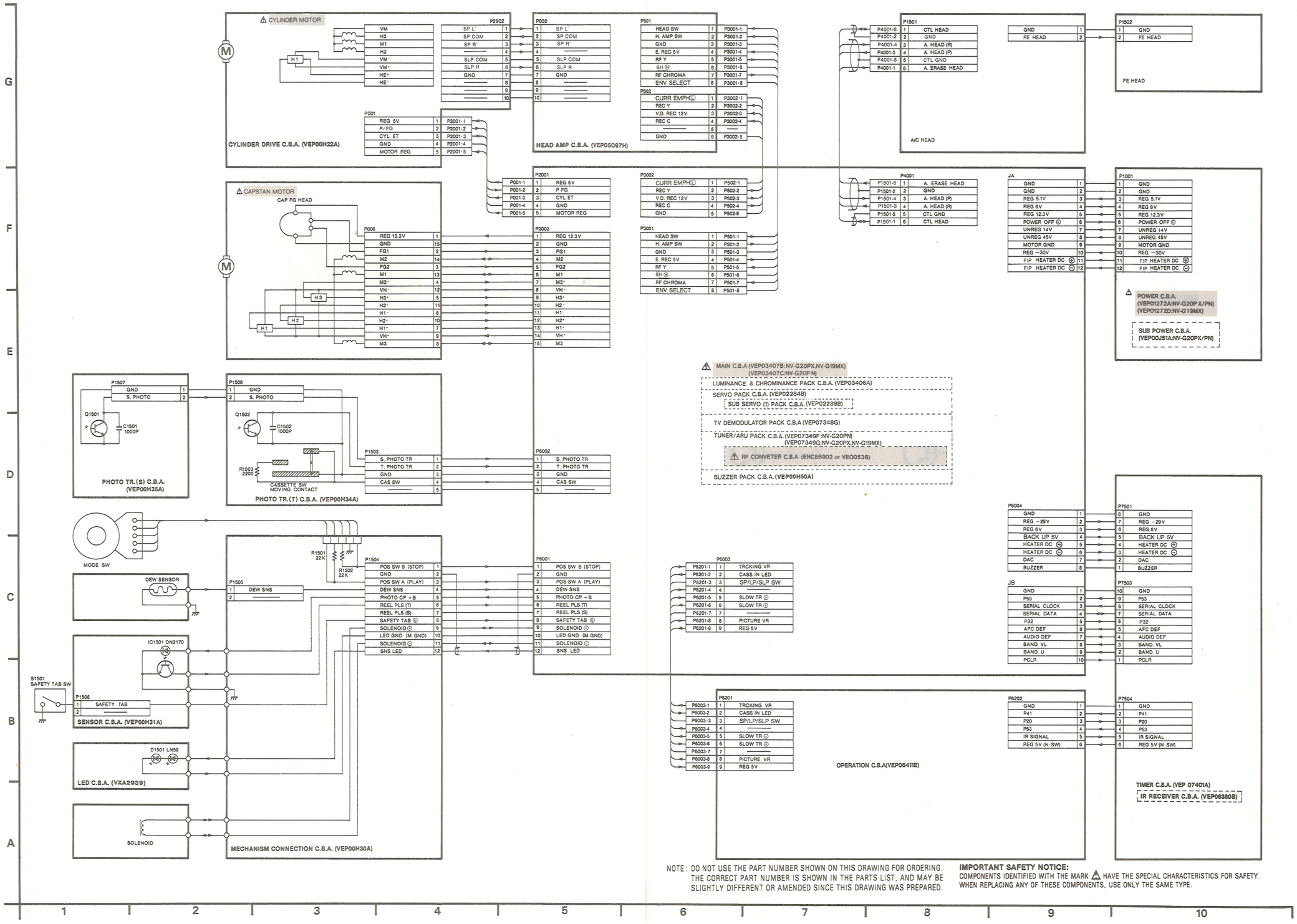

NOTE: DO NOT USE THE PART NUMBER SHOWN ON THIS DRAWING FOR ORDERING. THE CORRECT PART NUMBER IS SHOWN IN THE PARTS LIST, AND MAY BE SLIGHTLY DIFFERENT OR AMENDED SINCE THIS DRAWING WAS PREPARED.

IMPORTANT SAFETY NOTICE:
COMPONENTS IDENTIFIED WITH THE MARK ⚠ HAVE THE SPECIAL CHARACTERISTICS FOR SAFETY. WHEN REPLACING ANY OF THESE COMPONENTS, USE ONLY THE SAME TYPE.

Next Page: ICs & TRs INFORMATION Section

3-64. ICs & TRs INFORMATION

GENERAL CIRCUIT PARTS

AN5421
AN6913
TA7320P

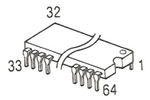

MN15362VJR
MN15283VJZ

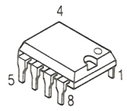

µPC393C
µPC358C

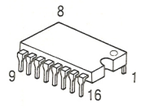

MN4053B
MN1220
MN1226

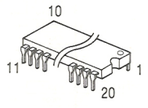

AN5034
AN3224K

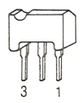

MN1280R
MN1280P

2SB643, 2SB641
2SB790, 2SC2206
2SD638, 2SB644
2SB636, 2SB642
2SD637, 2SD973
2SC2377, 2SD958
2SC788

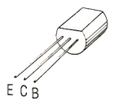

2SA1512
2SC3311A
2SA1309
2SB1036

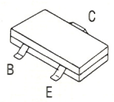

2SD601
2SC2295

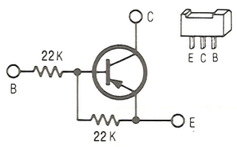

UN1112
DTA124EA

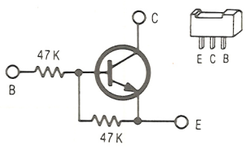

UN2214

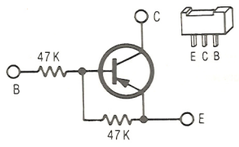

DTA144EA
UN1113

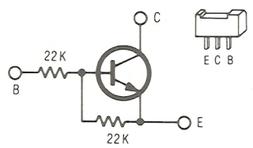

DTC124EA
UN1212

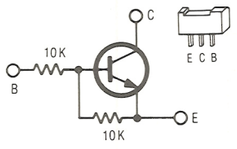

DTC114EA

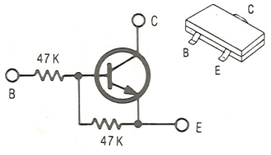

UN2213

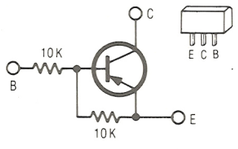

UN4112

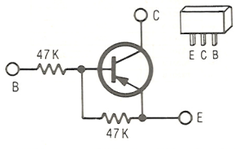

UN4113

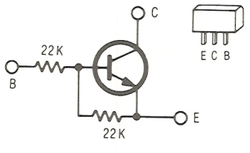

UN4212

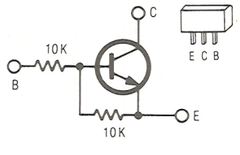

UN4111

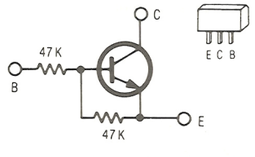

UN4213

SYSTEM CONTROL Section

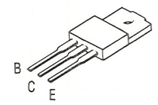

2SD1275

SERVO

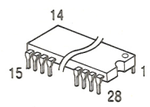

MN15311VJH
µPD6160CA509
µPD6161CA501

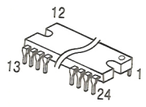

BA6430S

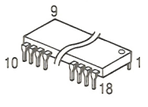

AN3812K

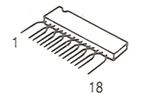

BA7025L

LUMINANCE & CHROMINANCE PACK

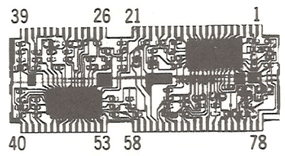

VEFY013

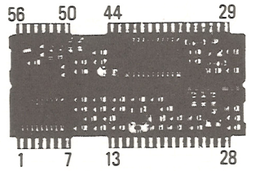

VEFC012

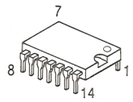

MN4013B

HEAD AMP PACK

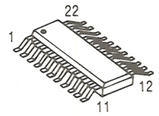

AN3311S

TV DEMODULATOR & TUNER ARU PACK

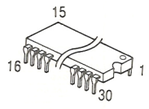

M51366SP

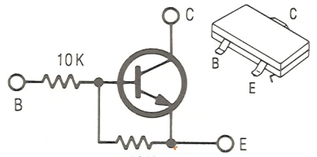

UN2211

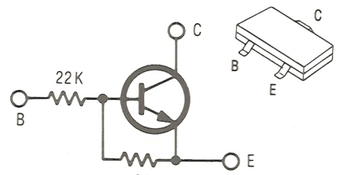

UN2212

TIMER

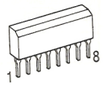

µPC1490HA

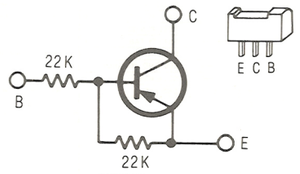

UN1112
DTA124EA

POWER

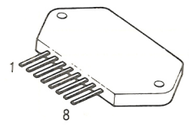

TSK5338

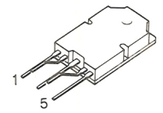

STR11006C

AUDIO Section

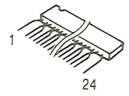

BA7752LS

CH SELECT

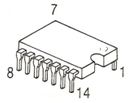

MN4066B

SYSTEM CONTROL Section

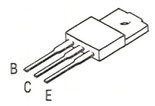

2SD1275

SERVO

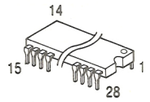

MN15311VJH
μPD6160CA509
μPD6161CA501

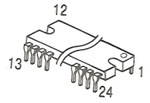

BA6430S

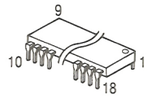

AN3812K

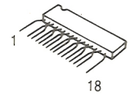

BA7025L

LUMINANCE & CHROMINANCE PACK

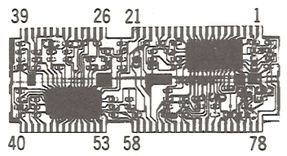

VEFY013

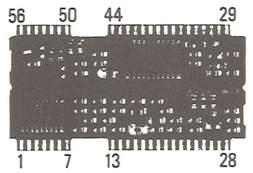

VEFC012

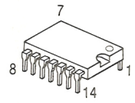

MN4013B

HEAD AMP PACK

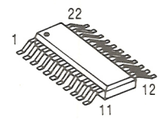

AN3311S

TV DEMODULATOR & TUNER ARU PACK

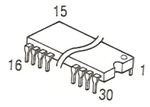

M51366SP

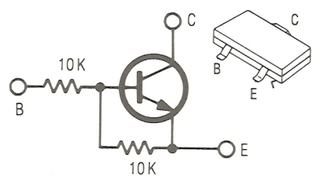

UN2211

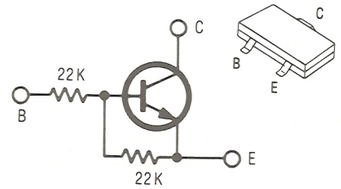

UN2212

TIMER

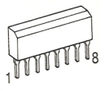

μPC1490HA

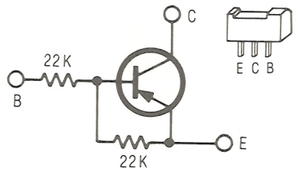

UN1112
DTA124EA

POWER

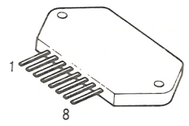

TSK5338

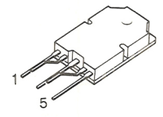

STR11006C

AUDIO Section

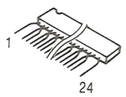

BA7752LS

CH SELECT

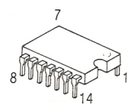

MN4066B

3-65. CIRCUIT BOARD LAYOUT (NV-G21PX/BR)

FRONT VIEW

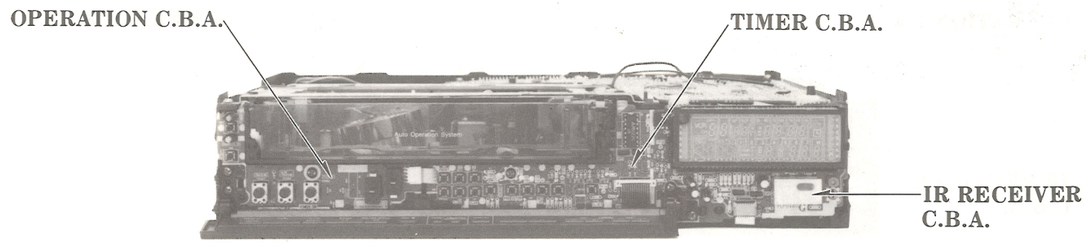

TOP VIEW (1)

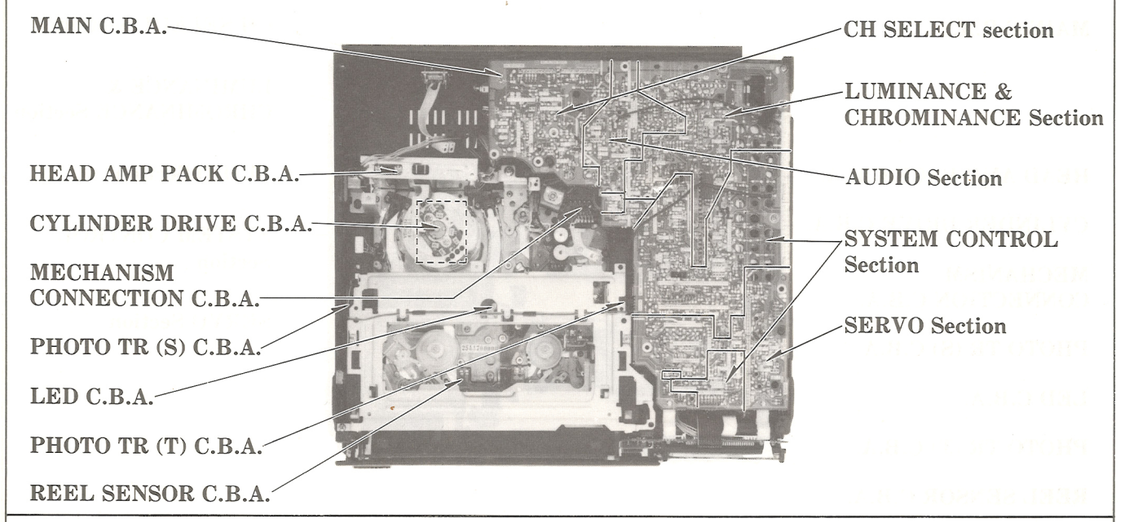

TOP VIEW (2)

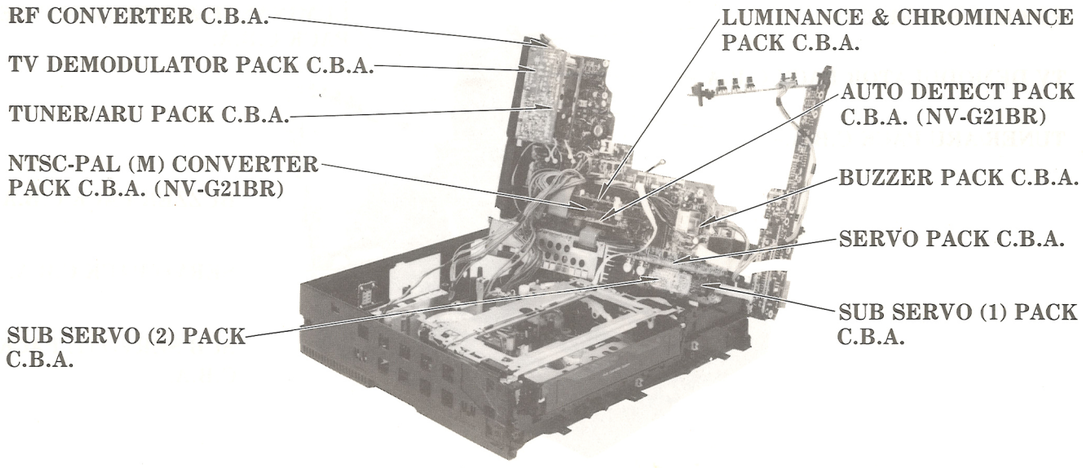

3-66. INTERCONNECTION SCHEMATIC DIAGRAM (NV-G21PX/BR)

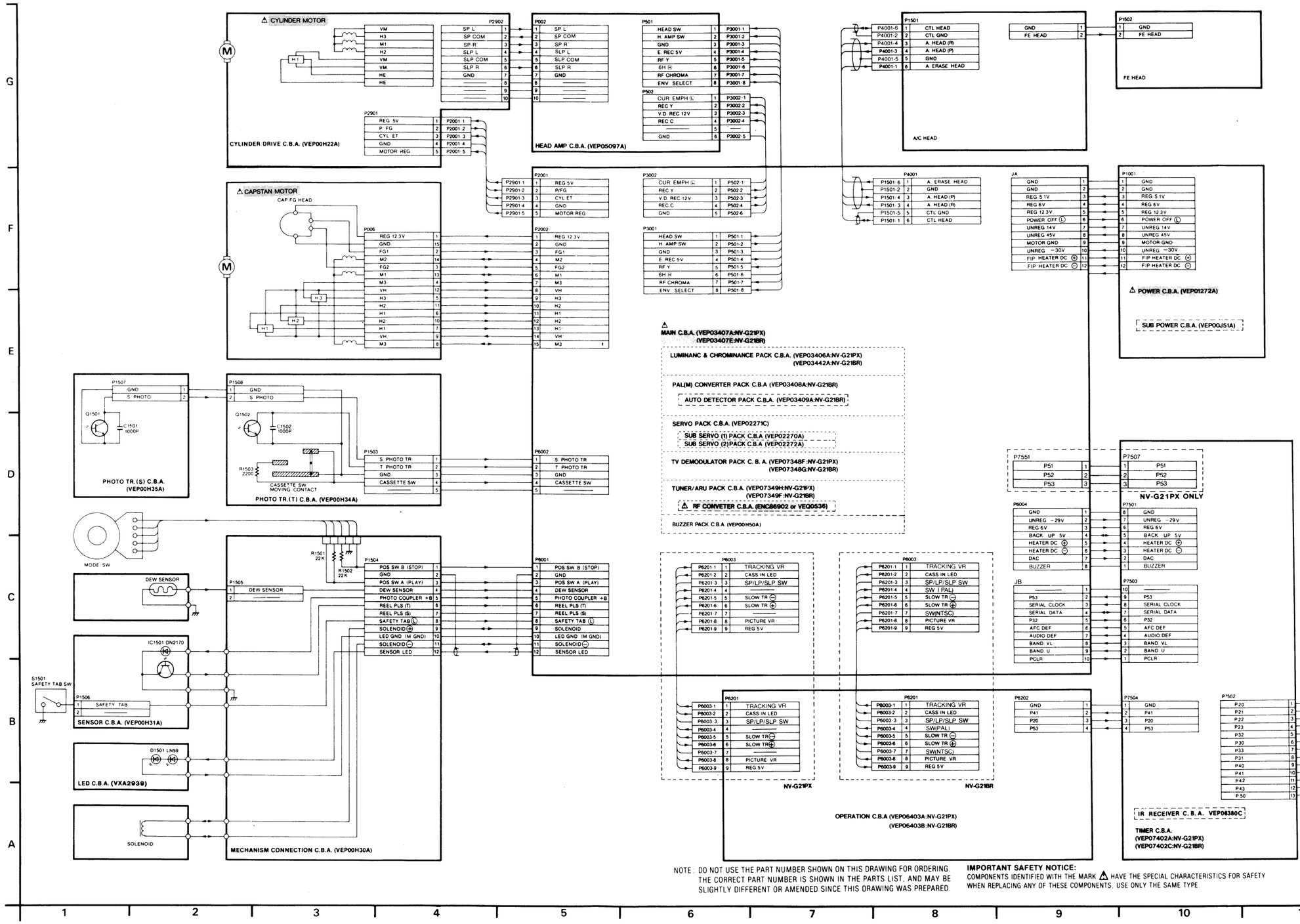

NOTE : DO NOT USE THE PART NUMBER SHOWN ON THIS DRAWING FOR ORDERING. THE CORRECT PART NUMBER IS SHOWN IN THE PARTS LIST, AND MAY BE SLIGHTLY DIFFERENT OR AMENDED SINCE THIS DRAWING WAS PREPARED.

IMPORTANT SAFETY NOTICE:
COMPONENTS IDENTIFIED WITH THE MARK ⚠ HAVE THE SPECIAL CHARACTERISTICS FOR SAFETY WHEN REPLACING ANY OF THESE COMPONENTS. USE ONLY THE SAME TYPE.

AM (NV-G21PX/BR)

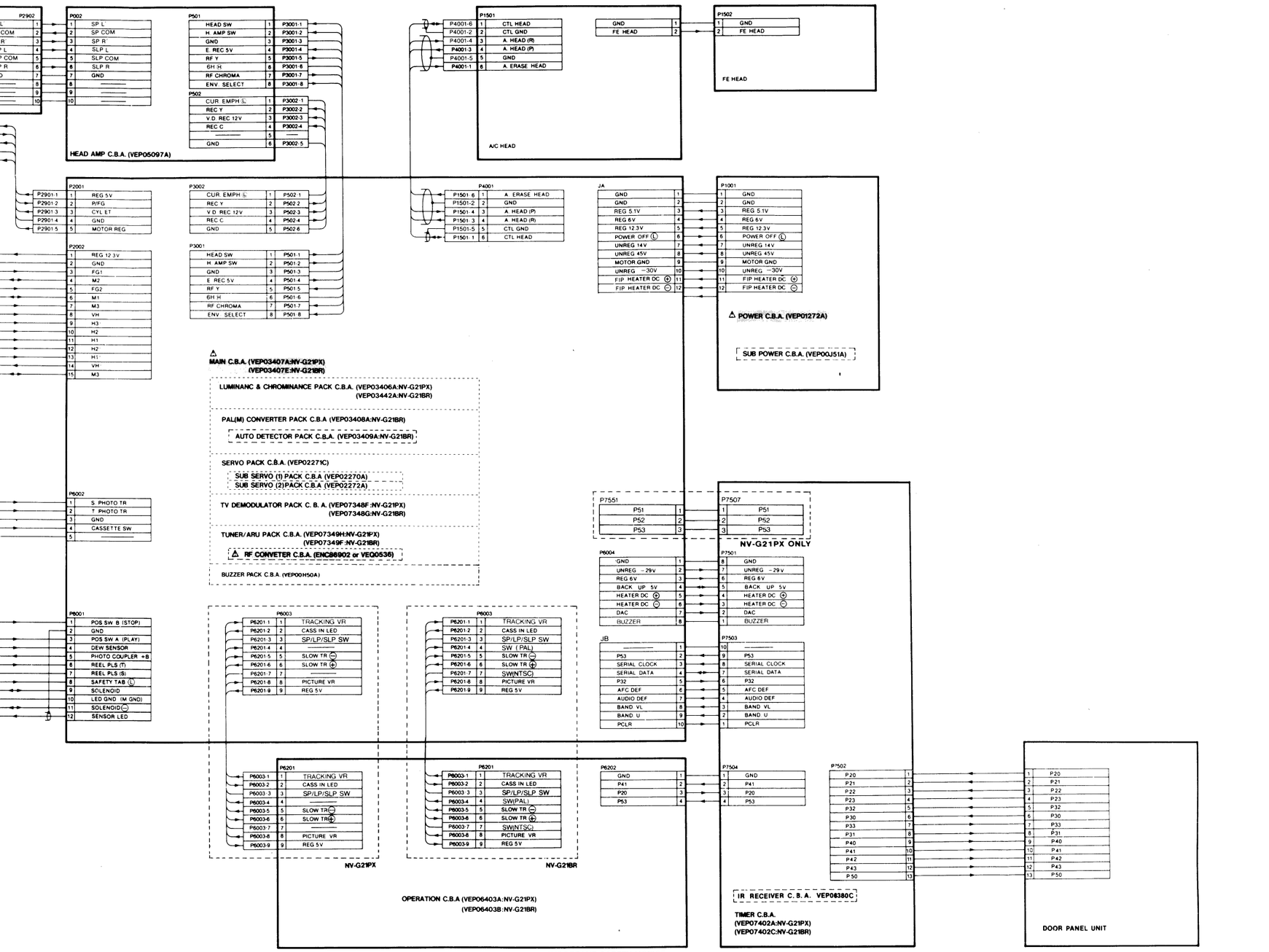

NOTE: DO NOT USE THE PART NUMBER SHOWN ON THIS DRAWING FOR ORDERING. THE CORRECT PART NUMBER IS SHOWN IN THE PARTS LIST, AND MAY BE SLIGHTLY DIFFERENT OR AMENDED SINCE THIS DRAWING WAS PREPARED.

IMPORTANT SAFETY NOTICE:
COMPONENTS IDENTIFIED WITH THE MARK ⚠ HAVE THE SPECIAL CHARACTERISTICS FOR SAFETY WHEN REPLACING ANY OF THESE COMPONENTS, USE ONLY THE SAME TYPE.

5 6 7 8 9 10 11 12 13

SECTION 4
EXPLODED VIEWS & PARTS LIST

4.1. EXPLODED VIEWS

❶ CHASSIS PARTS SECTION (1)

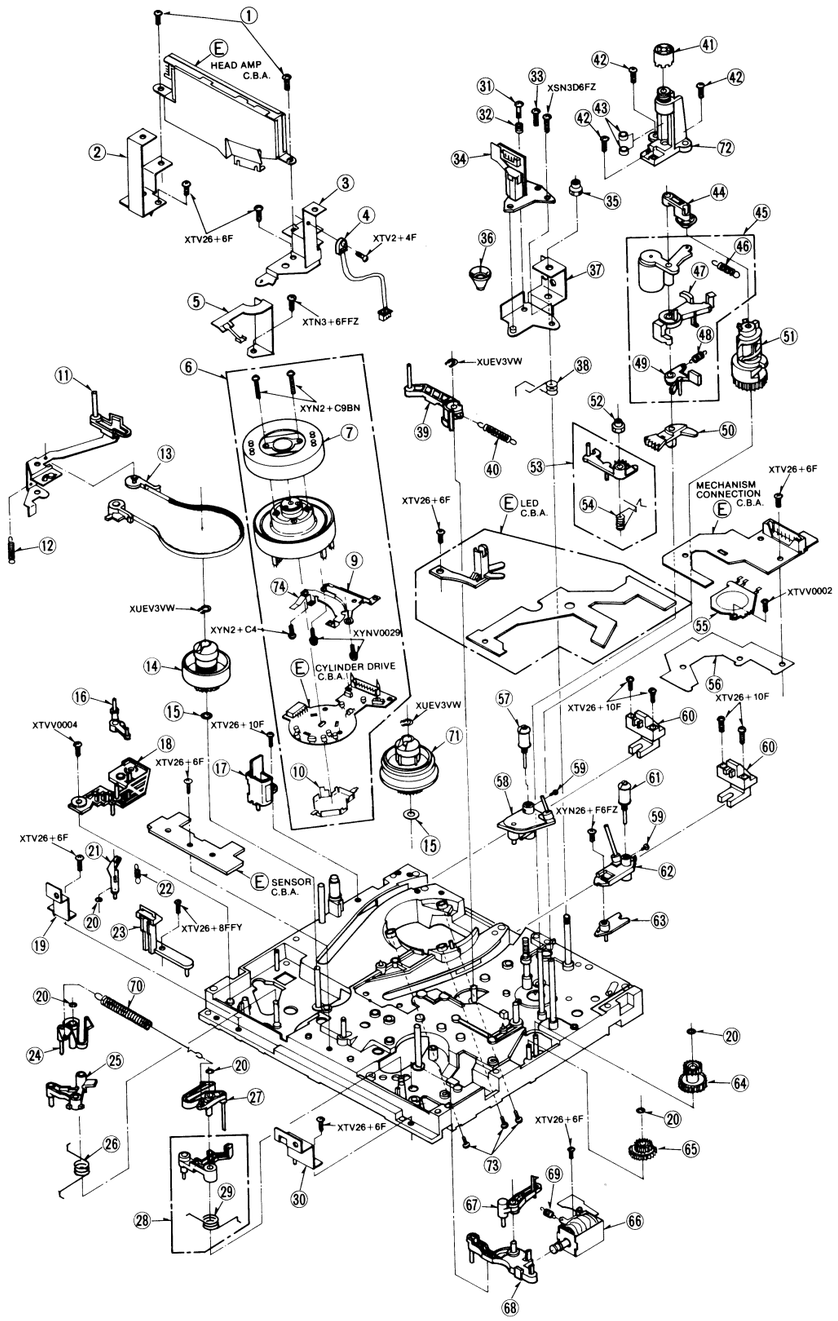

❷ CHASSIS PARTS SECTION (2)

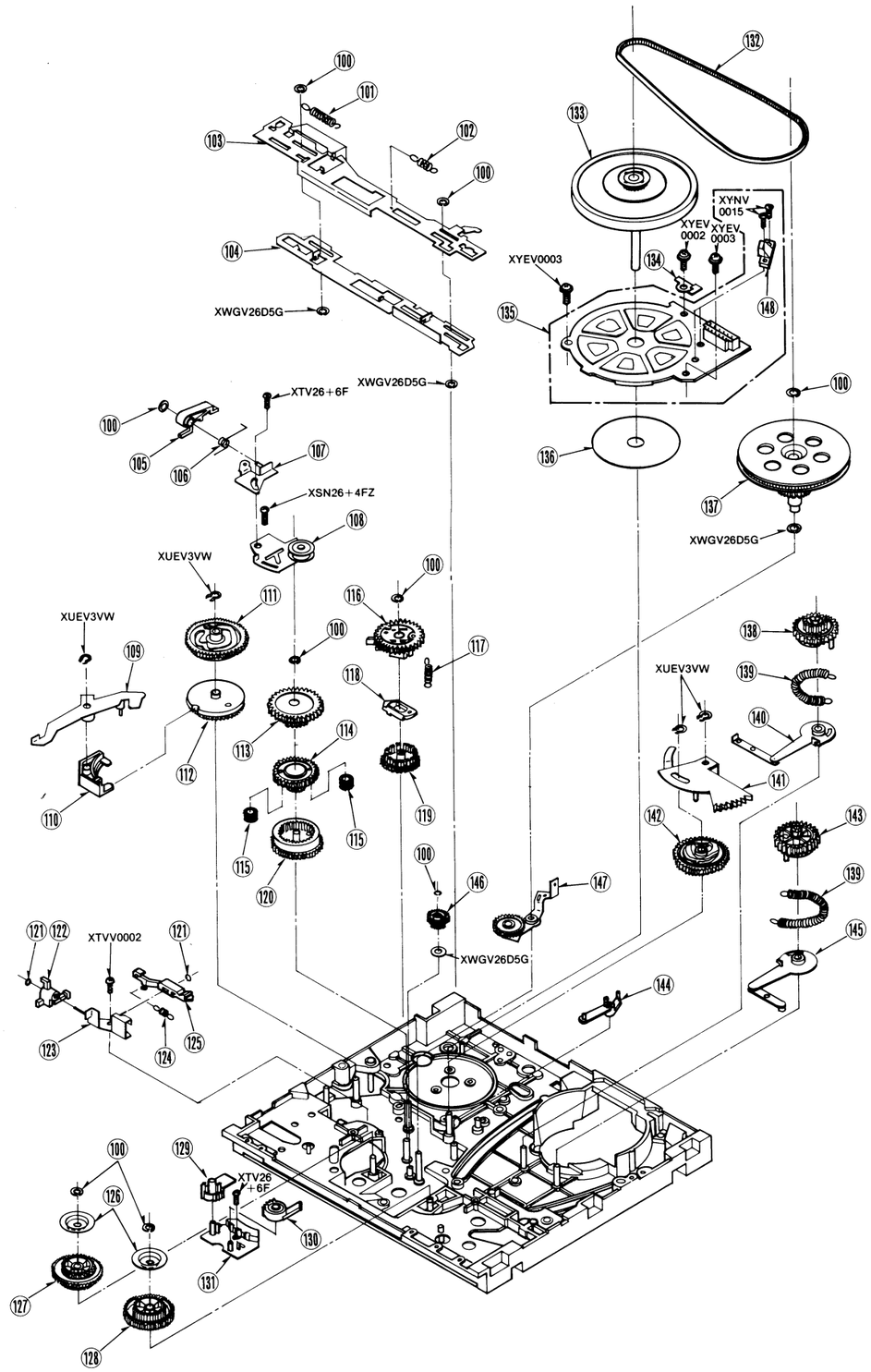

❸ CASSET

❷ CHASSIS PARTS SECTION (2)

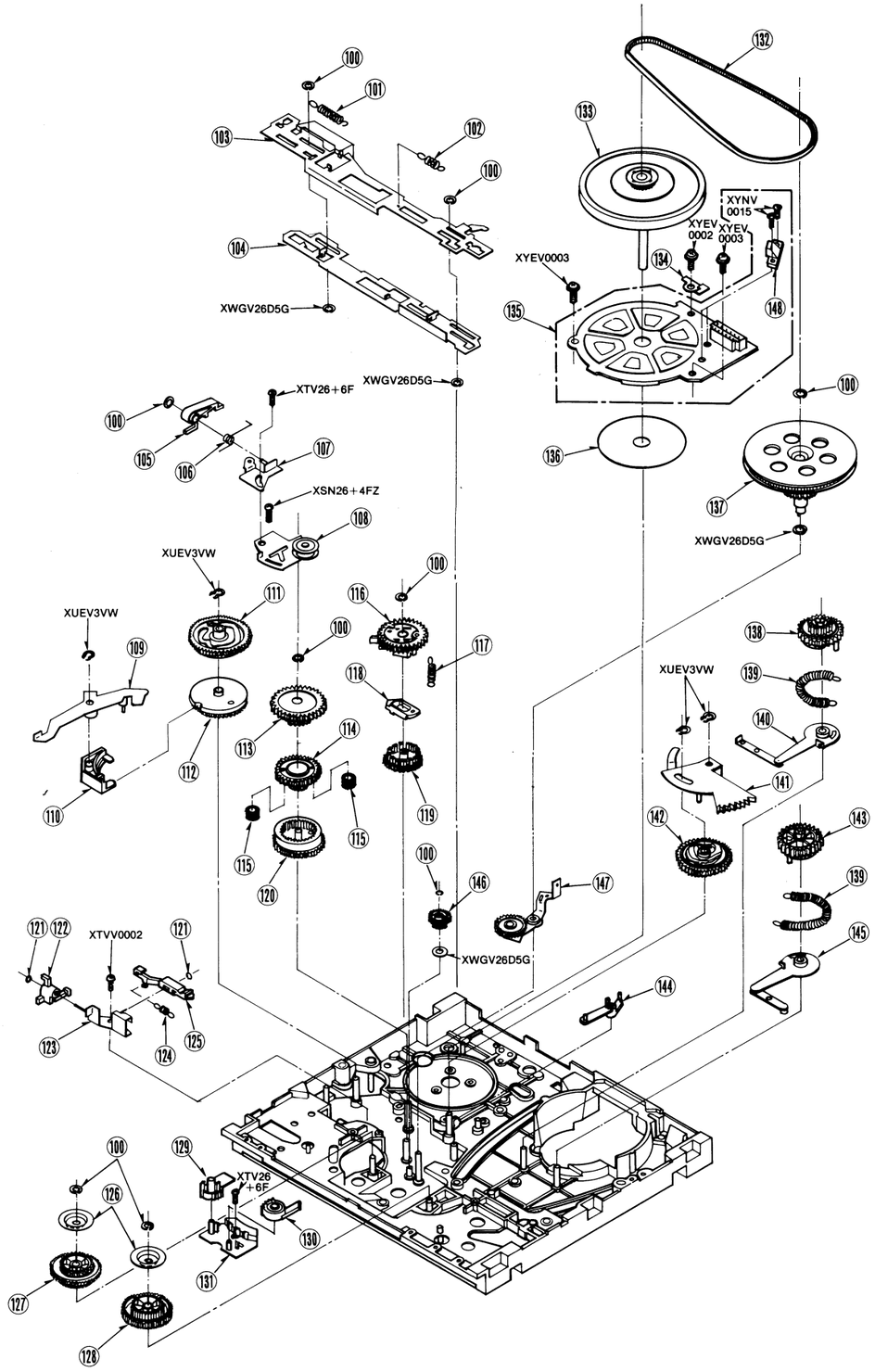

❸ CASSETTE UP MECHANISM SECTION

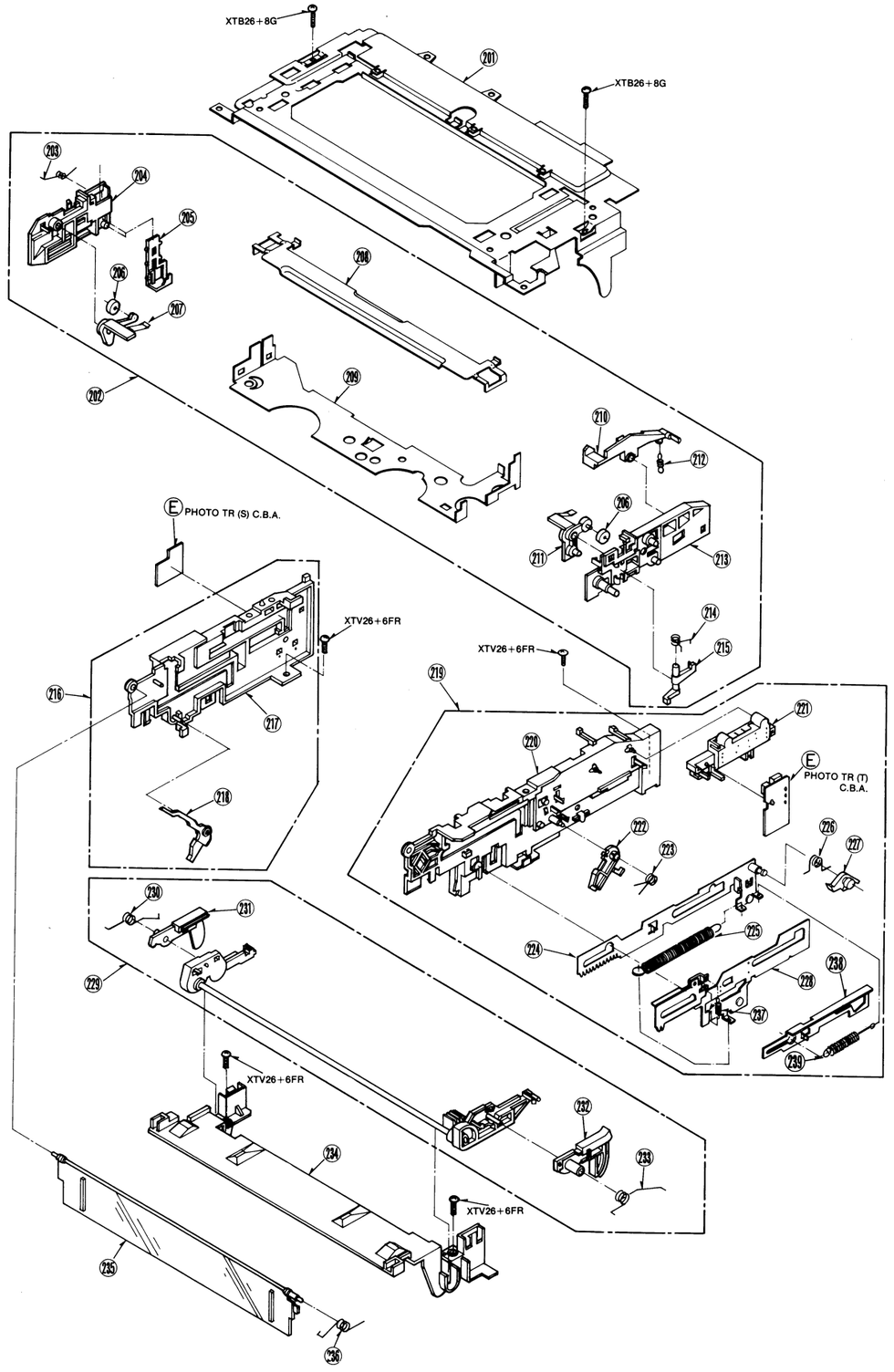

❹ CASING PARTS SECTION

(NV-G21PX/BR)

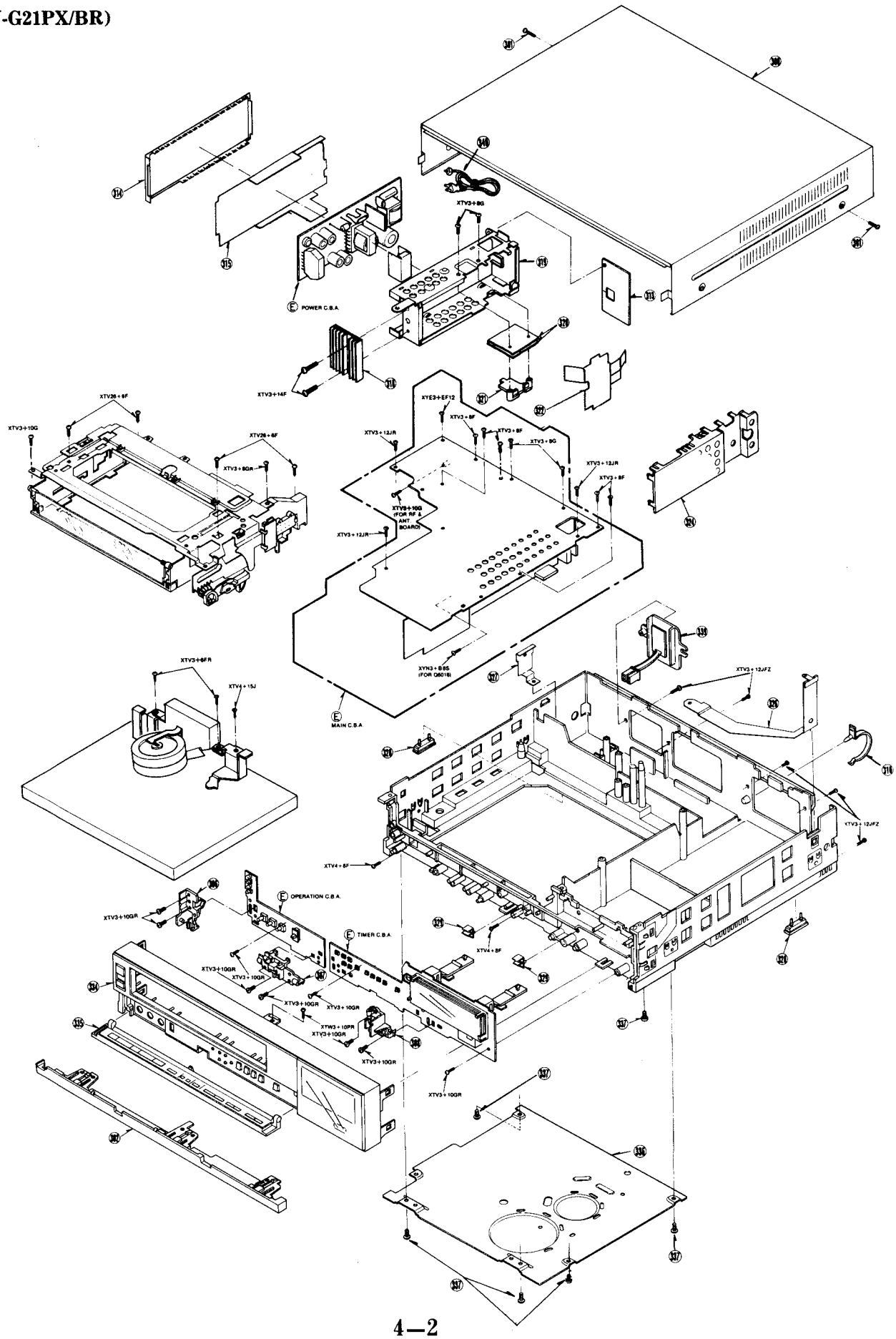

❹ CASING PARTS SECTION

(NV-G20PX/PN, NV-G19MX)

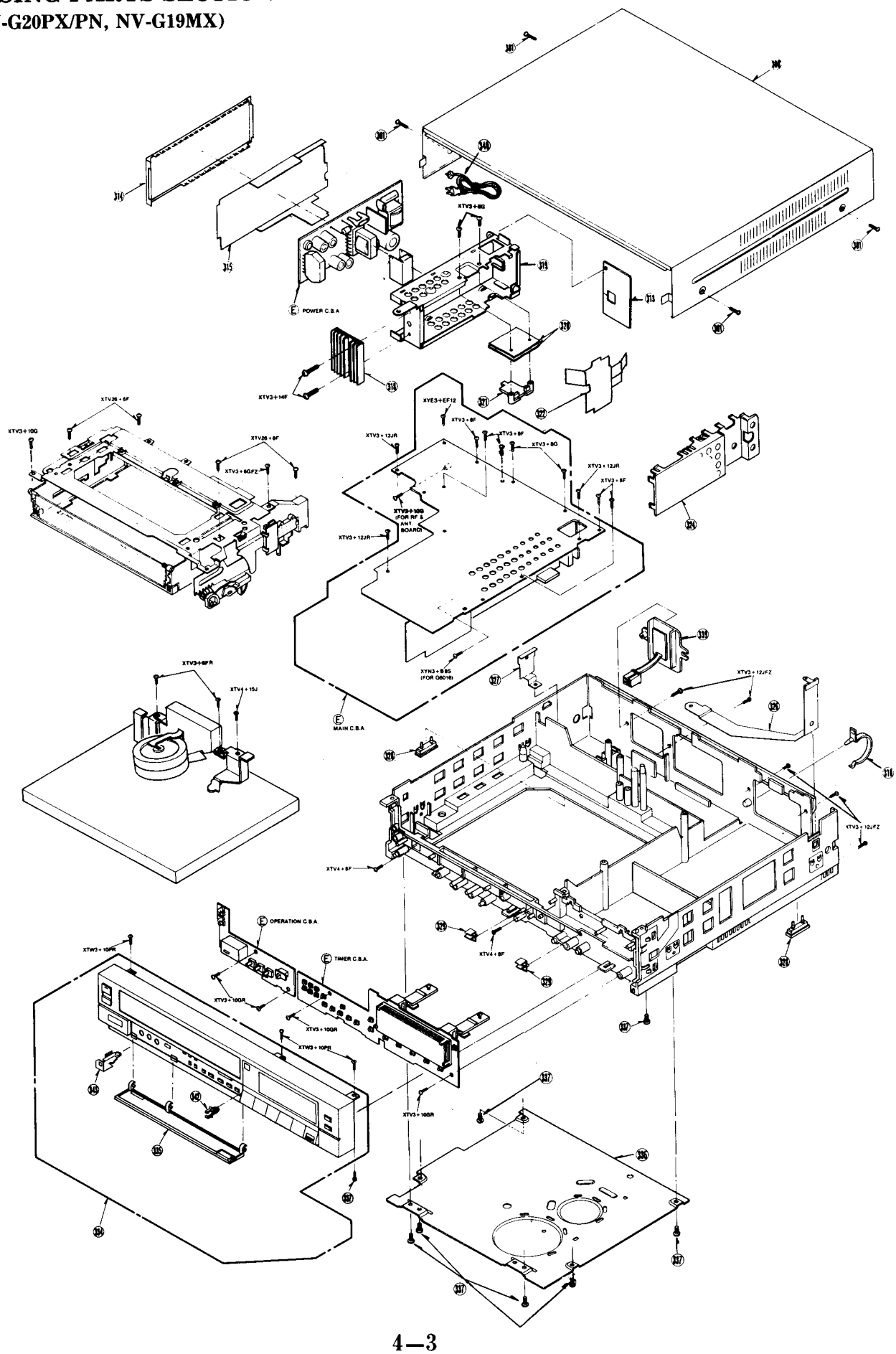

❺ PACKING PARTS SECTION

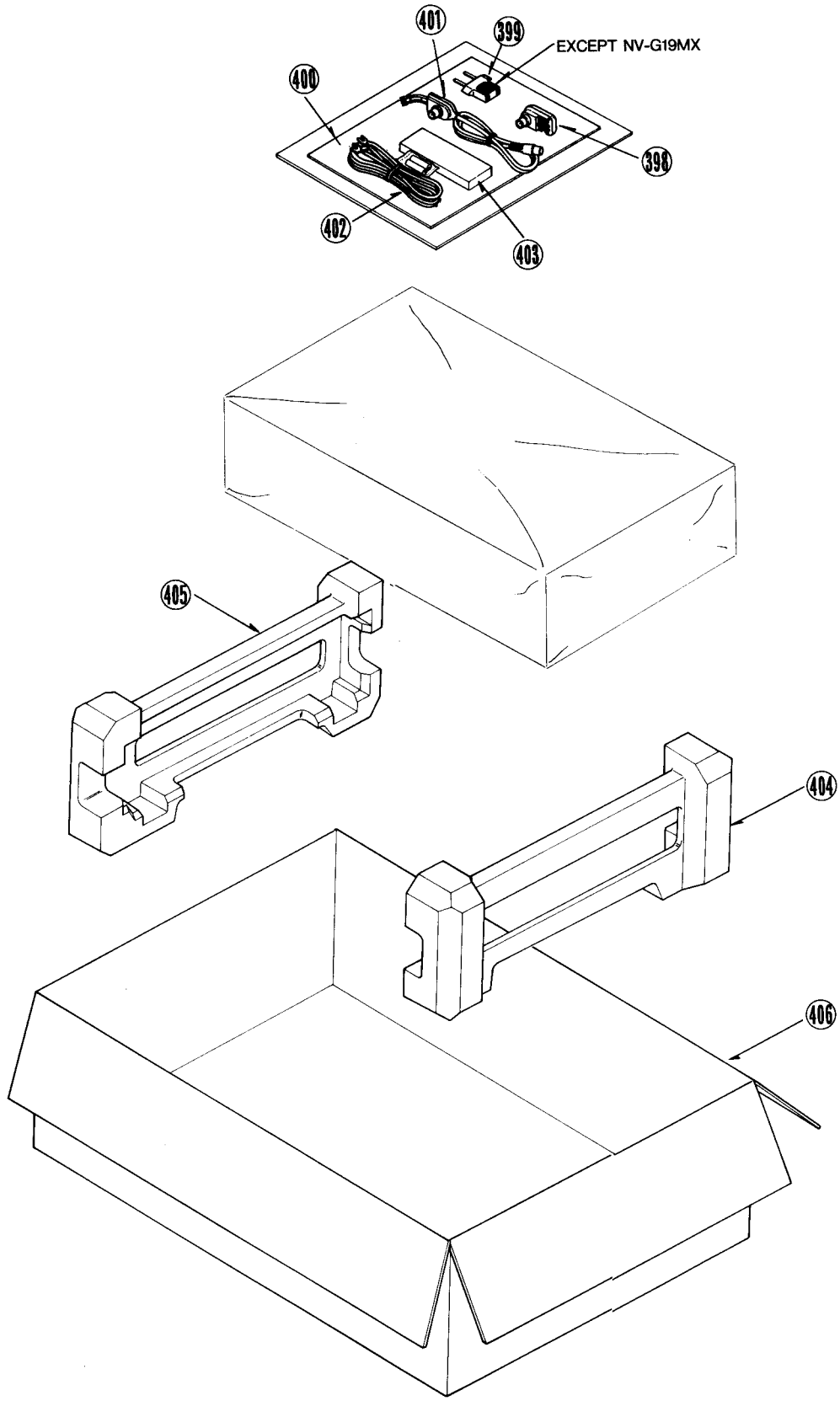

⑥ PROGRAMMABLE REMOTE CONTROL UNIT

(NV-G21PX)

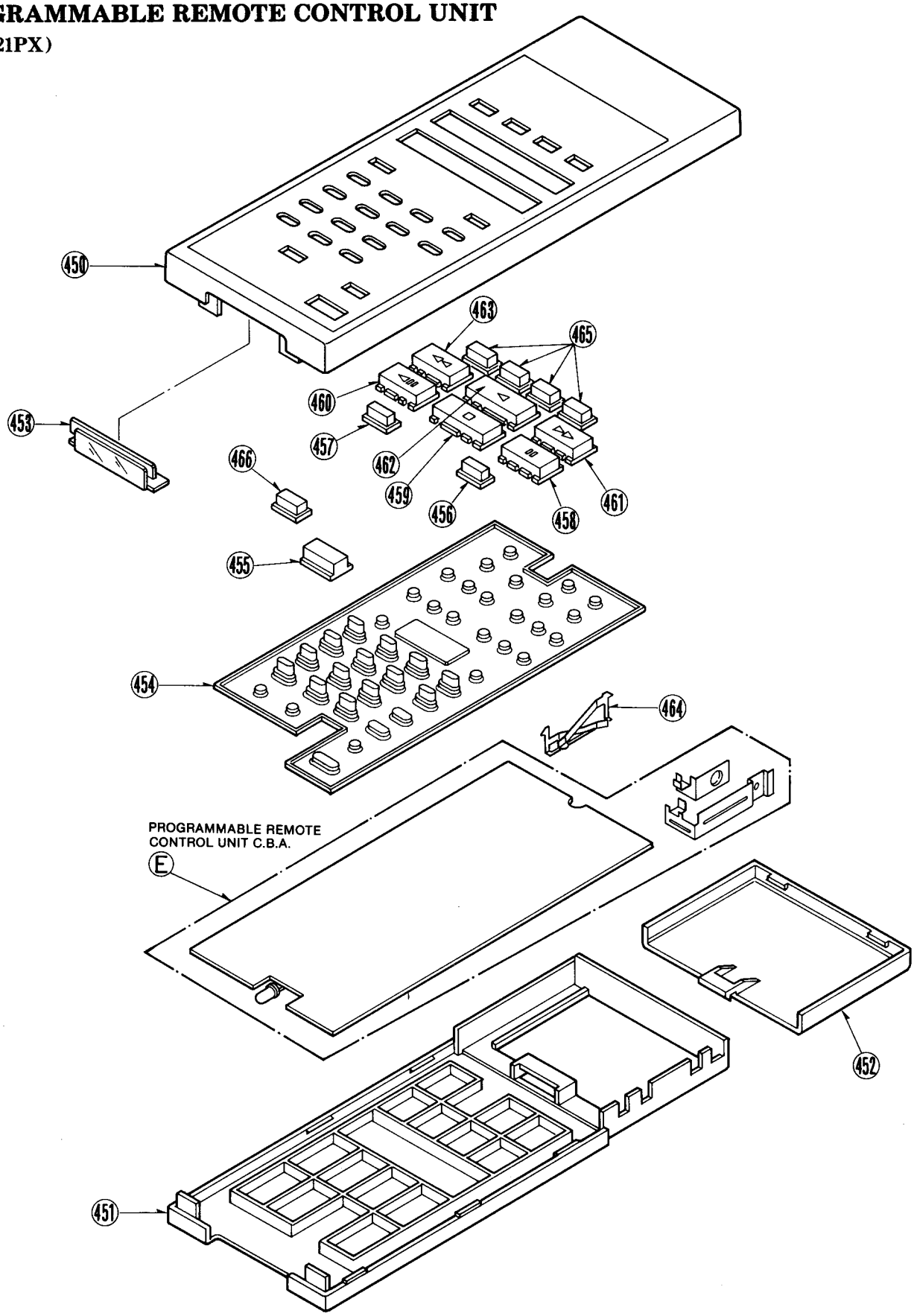

❻ IR REMOTE CONTROL UNIT

(NV-G21BR,

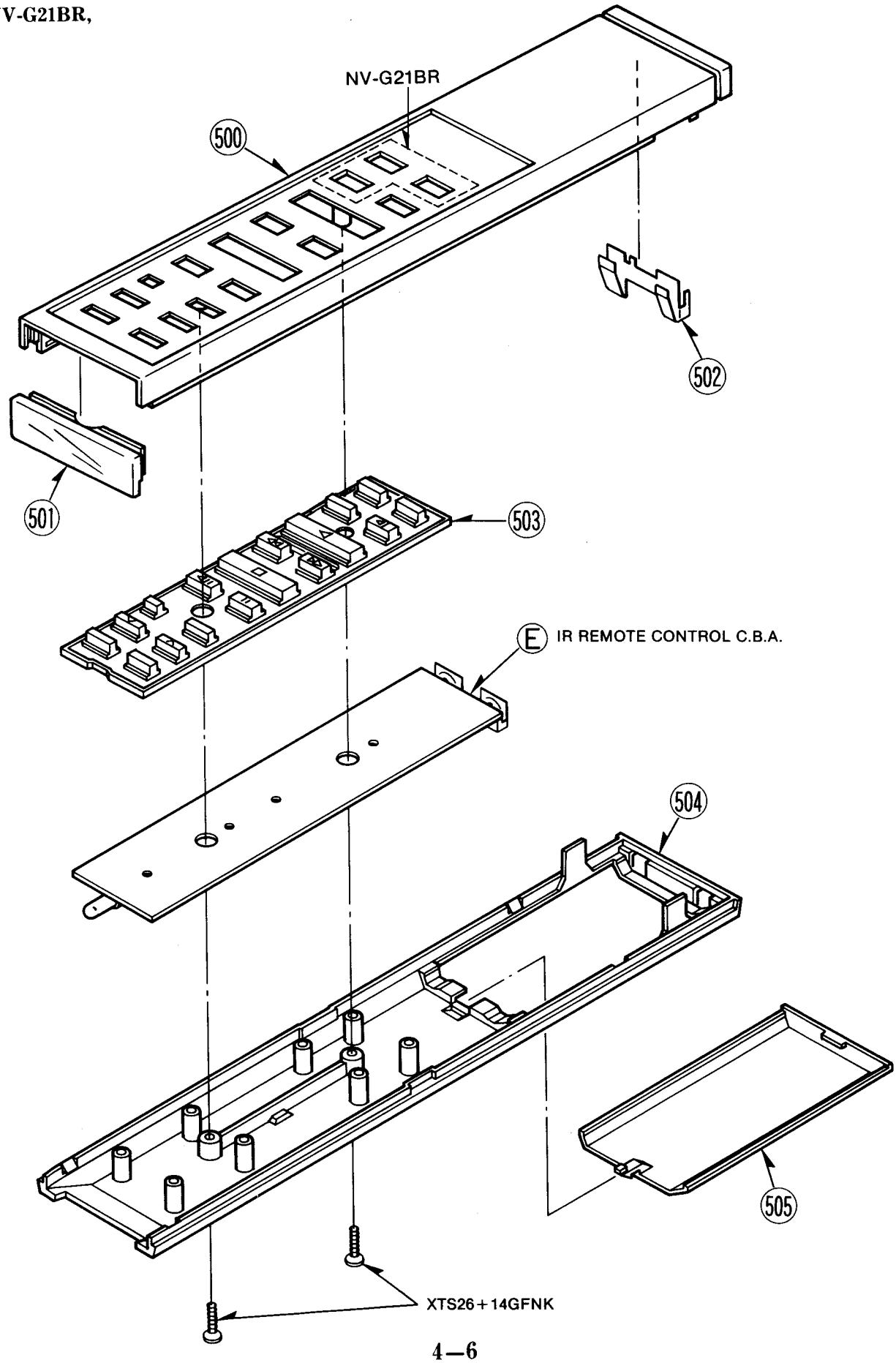

ORDER NO. VRD8704123A
(Date of issue: APR, 1987)

PARTS LIST

MODEL NO: NV-G21PX/BR, NV-G20PX/PN, NV-G19MX, VW-DS1P

1. NV-G21PX/BR Mechanical Replacement Parts List

※This parts list is detachable from the manual.

Note: 1.* Be sure to make your orders of replacement parts according to this list.
2. IMPORTANT SAFETY NOTICE
Components identified with the mark <!> have the special characteristics for safety. When replacing any of these components, use only the same type.

Ref.No.		Part No.	Part Name & Description	Pcs	Remarks
1(1)		VHD0268	HEAD AMP SET SCREW	3	
2(1)		VMA6897	HEAD AMP MOUNT ANGLE (L)	1	
3(1)		VMA6898	HEAD AMP MOUNT ANGLE (R)	1	
4(1)		VEK3185	DEW SENSOR UNIT	1	
5(1)		VXA2702	EARTH PLATE UNIT	1	
6(1)		VEG0453	CYLINDER UNIT	1	<!>
7(1)		VEH0343	UPPER CYLINDER UNIT	1	
9(1)		VXA2703	MAIN HOLDER UNIT	1	
10(1)		VSC1806	CYLINDER C.B.A SHIELD PLATE	1	
11(1)		VXL1495	TENSION ARM (1) UNIT	1	
12(1)		VMB1563	TENSION SPRING	1	
13(1)		VXZ0225	TENSION BAND UNIT	1	
14(1)		VXR0145	SUPPLY REEL TABLE UNIT	1	
15(1)		VMX1171	REEL WASHER	2	
16(1)		VXL1496	TENSION RELEASE ARM(A)UNIT	1	
17(1)		VBS0038	FE HEAD	1	
18(1)		VXA2705	TENSION ARM BASE (1) UNIT	1	
19(1)		VMA6895	MOUNT ANGLE (L)	1	
20(1)		VMX1079	CUT WASHER	5	
21(1)		VXL1497	TENSION RELEASE ARM(B)UNIT	1	
22(1)		VMB1582	TENSION RELEASE SPRING	1	
23(1)		VES0350	SAFETY SW	1	
24(1)		VXZ0229	SUPPLY MAIN BRAKE UNIT	1	
25(1)		VXZ0228	SUPPLY SOFT BRAKE(1)UNIT	1	
26(1)		VMB1564	SUPPLY SOFT BRAKE SPRING	1	
27(1)		VXZ0231	TAKE UP MAIN BRAKE UNIT	1	
28(1)		VXZ0221	TAKE UP SOFT BRAKE UNIT	1	
29(1)		VMB1561	TAKE UP SOFT BRAKE SPRING	1	
30(1)		VMA6896	MOUNT ANGLE (R)	1	
31(1)		VHD0322	ADJUST SCREW	1	
32(1)		VMB1251	ADJUST SPRING	1	
33(1)		VHD0089B	AZIMUTH ADJUST SCREW	1	
34(1)		VBR0102	A/C HEAD	1	
35(1)		VHN0063	M4 NYLON NUT	1	
36(1)		VHN0050	ADJUST NUT	1	
37(1)		VXA2675	HEAD BASE UNIT	1	
38(1)		VMB1567	A/C HEAD SPRING	1	
39(1)		VXL1480	SUB LOADING ARM (1) UNIT	1	
40(1)		VMB1566	SUB POST SPRING	1	
41(1)		VXQ0006	THRUST SCREW UNIT	1	
42(1)		VHD0317	HOUSING SCREW	3	
43(1)		VMX1033	OIL SEAL	2	
44(1)		VMX1151	PINCH CAM CAP	1	
45(1)		VXL1629	PRESSURE ROLLER UNIT	1	
46(1)		VMB1568	PIN PRESSURE SPRING	1	
47(1)		VML1873	PINCH PRESSURE ARM	1	
48(1)		VMB1569	PINCH PRESSURE ARM RELEASE SPRING	1	
49(1)		VML1874	PINCH LIFT ARM	1	
50(1)		VDG0357	P5 PULL OUT SECTOR GEAR	1	
51(1)		VDG0421	PINCH CAM	1	
52(1)		VHN0023	M3 NYLON NUT	1	
53(1)		VXL1485	P5 UNIT	1	
54(1)		VMB1554	P5 SPRING	1	
55(1)		VSS0175A	MODE SW	1	
56(1)		VSC1851	SHIELD PLATE	1	
57(1)		VXP0863	ROLLER POST UNIT	1	
58(1)		VXA2729	INCLIND BASE (S)(1)UNIT	1	
59(1)		VHD0133	ROLLER POST SCREW	2	
60(1)		VMD0910	POST STOPPER	2	
61(1)		VXP0764A	ROLLER POST UNIT	1	
62(1)		VXA2686	INCLIND BASE(T)(1)UNIT	1	
63(1)		VXA2687	INCLIND ADJUST PLATE UNIT	1	
64(1)		VDG0334	PINCH SPEED DOWN GEAR	1	
65(1)		VDG0332	CONNECTION GEAR	1	
66(1)		VXA2693	SOLENOID	1	
67(1)		VXA2692	KICK ROD UNIT	1	
68(1)		VXA2691	SOLENOID LEVER (1) UNIT	1	
69(1)		VMB1553	KICK ROD SPRING	1	
70(1)		VMB1565	MAIN BRAKE SPRING	1	
71(1)		VXR0146	TAKE UP REEL TABLE UNIT	1	
72(1)		VXD0101	HOUSING UNIT	1	
73(1)		VHD0342	CYLINDER UNIT MOUNT SCREW	3	
74(1)		VSC1843	HEAT SINK PLATE	1	
100(2)		VMX1079	CUT WASHER	8	
101(2)		VMB1583	TAKE UP SOFT BRAKE RELEASE ARM SPRING	1	
102(2)		VMB1560	MAIN LEVER SPRING	1	
103(2)		VXA2701	MAIN LEVER (1) UNIT	1	
104(2)		VMM0160	SUB LEVER	1	
105(2)		VXL1500	SS BRAKE ARM UNIT	1	
106(2)		VMB1588	SS BRAKE SPRING	1	
107(2)		VXA2707	SS BRAKE BASE (1) UNIT	1	
108(2)		VXA2674	TENSION ROLLER UNIT	1	
109(2)		VXL1491	CAM FOLLOWER ARM UNIT	1	
110(2)		VML1861	DETENT ARM	1	
111(2)		VDG0346	MAIN CAM GEAR	1	
112(2)		VDG0343	SUB CAM GEAR	1	
113(2)		VDG0348	CENTRE GEAR	1	
114(2)		VDG0344	RETAINER GEAR	1	
115(2)		VDG0345	PLANET GEAR	2	
116(2)		VDG0349	CLUTCH DISK	1	
117(2)		VMB1558	CLUTCH SPRING	1	
118(2)		VDG0350	LOCK SLIDE GEAR	1	
119(2)		VDG0335	DRIVE DISK	1	
120(2)		VDG0342	RING GEAR	1	
121(2)		VMX0967	CUT WASHER	2	
122(2)		VML1859	CHANGE LEVER	1	
123(2)		VXA2672	RELEASE LEVER (1) UNIT	1	
124(2)		VMB1557	RELEASE SPRING	1	
125(2)		VML1860	RELEASE LEVER	1	
126(2)		VMX1124	REEL GEAR RING	2	
127(2)		VXP0779	TAKE UP REEL GEAR UNIT	1	
128(2)		VDG0337	SUPPLY REEL GEAR	1	
129(2)		VML1858	RETURN LEVER (R)	1	
130(2)		VML1857	RETURN LEVER (L)	1	
131(2)		VMD0913	STOPPER BASE	1	
132(2)		VDV0159	TIMING BELT	1	
133(2)		VXP0777	ROTOR UNIT	1	
134(2)		VMA6998	ROTOR STOPPER	1	
135(2)		VEK2944	STATOR UNIT	1	<!>
136(2)		VMA6847	SUB PLATE	1	
137(2)		VXP0767	CENTRE PULLEY UNIT	1	
138(2)		VDG0340	LOADING GEAR (T)	1	
139(2)		VMB1555	LOADING SPRING	2	
140(2)		VXL1489	LOADING ARM (T)(1) UNIT	1	
141(2)		VXA2673	SECTOR GEAR UNIT	1	
142(2)		VDG0347	LOADING CAM GEAR	1	
143(2)		VDG0339	LOADING GEAR (S)	1	
144(2)		VML1855	PLAY CONTROL ARM	1	
145(2)		VXL1487	LOADING ARM (S)(1) UNIT	1	
146(2)		VDG0336	INTERMEDIATE GEAR	1	
147(2)		VXL1490	PLAY ARM UNIT	1	
148(2)		VBK0048	FG HEAD	1	
201(3)		VMA6903	TOP PLATE	1	
202(3)		VXA2679	CASSETTE HOLDER UNIT	1	
203(3)		VMB1573	MOUNT LEVER SPRING	1	
204(3)		VMD0919	HOLDER GUIDE (L)	1	
205(3)		VMM0163	MOUNT LEVER	1	
206(3)		VDP1077	ROLLER	2	
207(3)		VML1883	PRESSURE LEVER (L)	1	
208(3)		VMA6902	HOLDER ANGLE	1	
209(3)		VMA6901	CASSETTE HOLDER	1	
210(3)		VML1882	OPENER LEVER	1	
211(3)		VML1884	PRESSURE LEVER (R)	1	
212(3)		VMB1584	OPENER LEVER SPRING	1	
213(3)		VMD0920	HOLDER GUIDE (R)	1	
214(3)		VMB1576	RELEASE SPRING	1	
215(3)		VML1881	RELEASE LEVER	1	
216(3)		VXA2676	SIDE PLATE (L) UNIT	1	
217(3)		VMD0917	SIDE PLATE (L)	1	
218(3)		VML1880	OPENER LEVER	1	
219(3)		VXA2677	SIDE PLATE (R) UNIT	1	

Ref.No.		Part No.	Part Name & Description	Pcs	Remarks
220(3)		VMD0918	SIDE PLATE (R)	1	
221(3)		VSS0176	SLIDE SW	1	
222(3)		VML1886	DOWN SUPPORT LEVER	1	
223(3)		VMB1575	DOWN SUPPORT SPRING	1	
224(3)		VXA2695	RACK (A)(1) UNIT	1	
225(3)		VMB1572	CLUTCH SPRING	1	
226(3)		VMB1574	LOCK SPRING	1	
227(3)		VML1885	LOCK LEVER	1	
228(3)		VXA2829	RACK (B) UNIT	1	
229(3)		VXP0851	MAIN SHAFT UNIT	1	
230(3)		VMB1570	SUB WIPER SPRING (L)	1	
231(3)		VML1878	SUB WIPER ARM	1	
232(3)		VML1879	SUB WIPER ARM (R)	1	
233(3)		VMB1571	SUB WIPER SPRING (R)	1	
234(3)		VMA6900	CASSETTE GUIDE	1	
235(3)		VKF0848	BLINDER PANEL	1	
236(3)		VMB1258	BLINDER SPRING	1	
237(3)		VMB1650	RACK (C) SPRING	1	
238(3)		VMA7062	CONNECTION ROD	1	
239(3)		VMB1686	CONNECTION ROD	1	
300(4)		VGM0201	TOP PANEL UNIT	1	
301(4)		VHD0304	TOP PANEL SCREW	2	
302(4)		VYP1803	FRONT LOWER PANNEL	1	
306(4)		VGQ1084	HOLDER (A)	1	
307(4)		VGQ1085	HOLDER (B)	1	
308(4)		VGQ1086	HOLDER (C)	1	
310(4)		VJF0139	AC CORD CLAMPER	1	
313(4)		VGH1239	POWER NAME PLATE	1	
314(4)		VSC1827	SHIELD CASE (L)	1	
315(4)		VMZ1018	BARRIER (A)	1	<!>
316(4)		VMZ1053	BARRIER (B)	1	<!>
318(4)		VSC1830	HEAT SINK	1	
319(4)		VSC2045	SHIELD CASE MAIN	1	
320(4)		VMZ0876	INSULATION SHEET	2	<!>
321(4)		VGQ1109	TR. HOLDER	1	
322(4)		VMZ1030	BARRIER (C)	1	<!>
324(4)		VSC1829	SHIELD CASE (R)	1	
326(4)		VMP1038	TOP HOLDER ANGLE (R)	1	
327(4)		VMP1037	TOP HOLDER ANGLE (L)	1	
328(4)		VKA0026	RUBBER FOOT	2	
329(4)		VJF0285	WIRE SUDDLE	2	
334(4)		VYP1897	FRONT PANEL UNIT	1	NV-G21PX
334(4)		VYP1934	FRONT PANEL UNIT	1	NV-G21BR
335(4)		VYF1042	FRONT DOOR UNIT	1	
336(4)		VKU0245	BOTTOM PLATE	1	
337(4)		VHD0059	BOTTOM SCREW	5	
339(4)		VEJ0564	ANT TERMINAL	1	
340(4)		VJA0419	AC CORD	1	
398(5)		VSQ0057	300ohm-75ohm TRANSFORMER	1	
399(5)		VJSS0070	POWER PLUG ADAPTOR	1	
400(5)		VQT2212	OPERATING INSTRUCTIONS	1	NV-G20PX<!>
400(5)		VQT2275	OPERATING INSTRUCTIONS	1	NV-G20BR<!>
401(5)		VJA0102	TWIN LEAD CABLE(FLAT)	1	
402(5)		VJA0322	COAXIAL CABLE WITH SPLITTER	1	
403(5)		VEQ0535	REMOTE CONTROL UNIT	1	NV-G21PX
403(5)		VEQ0565	REMOTE CONTROL UNIT	1	NV-G21BR
404(5)		VPN1851	CUSHION (R)	1	
405(5)		VPN1852	CUSHION (L)	1	
406(5)		VPG3328	PACKING CASE	1	NV-G21PX
406(5)		VPG3406	PACKING CASE	1	NV-G21BR
450(6)		VYK1599	TOP CASE UNIT	1	NV-G21PX
451(6)		VKM0843	BOTTOM CASE	1	NV-G21PX
452(6)		VKF0824	BATTERY COVER	1	NV-G21PX
453(6)		VKW0758	IR WINDOW	1	NV-G21PX
454(6)		VSP0268	RUBBER CONTACT	1	NV-G21PX
455(6)		VGU3406	POWER BUTTON	1	NV-G21PX
456(6)		VGU3407	REC BUTTON (RED)	1	NV-G21PX
457(6)		VGU3408	REC BUTTON (BLACK)	1	NV-G21PX
458(6)		VGU3403	STILL BUTTON	1	NV-G21PX
459(6)		VGU3410	STOP BUTTON	1	NV-G21PX
460(6)		VGU3404	STILL ADV BUTTON	1	NV-G21PX
461(6)		VGU3412	REW BUTTON	1	NV-G21PX

Ref.No.		Part No.	Part Name & Description	Pcs	Remarks
462(6)		VGU3409	PLAY BUTTON	1	NV-G21PX
463(6)		VGU3411	FF BUTTON	1	NV-G21PX
464(6)		VJR0229	ELECTRODE (COMMON)	1	NV-G21PX
465(6)		VGU2274	CH BUTTON	5	NV-G21PX
466(6)		VGU3628	TIMER REC BUTTON	1	NV-G21PX
500(7)		VYK1644	TOP CASE UNIT	1	NV-G21BR
501(7)		VKW0617	SMOKE BOARD	1	NV-G21BR
502(7)		VJR0185	ELECTRODE(COMMON)	1	NV-G21BR
503(7)		VSP0242	RUBBER CONTACT	1	NV-G21BR
504(7)		VKM0856	BOTTOM CASE	1	NV-G21BR
505(7)		VKF0628	BATTERY CASE	1	NV-G21BR
			JIG		
		VFM8080HMFP	VHS-ALIGNMENT TAPE	1	
		VFK0335	RETAINING RING REMOVER	1	
			(3mm/4mm)		
		VFK0387	TENSION POST ADJUSTMENT	1	
			PLATE		
		VFK0191	POST ADJUSTMENT PLATE	1	
		VFK0190	REEL TABLE HEIGHT GAUGE	1	
		VFK0328	H-POSITION ADJ.	1	
			SCREWDRIVER		
		VFK0329	POST ADJUSTMENT SCREWDRIVER	1	
		VFK62	FAN TYPE TENSION GAUGE	1	
		VFK0326	HEX WRENCH SET	1	
		VFK0132	BACK TENSION METER	1	
		VFK0343	CHECK LIGHT	1	
		VFK0344	HEIGHT ADJUSTMENT JIG	1	
		VFK27	HEAD CLEANING STICK	1	
		MOR265	MORLYTONE GREASE	1	
		VFK0283	SERVICE ALIGNMENT TOOL KIT	1	
		VFK0341	UPPER CYLINDER REMOVER	1	

2.NV-G21PX/BR Electrical Replacement Parts List

Note:1.* Be sure to make your orders of replacement parts according to this list.
2.IMPORTANT SAFETY NOTICE
Components identified with the mark <!> have the special characteristics for safety. When replacing any of these components,use only the same type.
3.Unless otherwise specified,
All resistors are in OHMS ,K-1,000 OHMS. All capacitors are in MICRO-FARADS(uf),P-uuF.
4.The P.C.Board units marked width'■'show below the main assembled parts.

Ref.No.		Part No.	Part Name & Description	Pcs	Remarks
		VEP03407A	MAIN C.B.A.	1	NV-G21PX
			(SYSTEM COMTROL,SERVO,		INCLUDING THE SERVO
			LUMINANCE & CHROMINANCE,		PACK C.B.A.
			AUDIO,TV DEMODULATOR)		(VEP02271C),SUB
					SERVO (1) PACK C.B.A
					(VEP02270A),SUB
					SERVO (2) PACK C.B.A
					(VEP02272A),
					LUMINANCE &
					CHROMINANCE PACK
					C.B.A.(VEP03406A),
					TV DEMODULATOR PACK
					C.B.A.(VEP07348F),
					TUNER ARU PACK
					C.B.A.(VEP07349H)
		VEP03407E	MAIN C.B.A.	1	NV-G21BR
			(SYSTEM COMTROL,SERVO,		INCLUDING THE SERVO
			LUMINANCE & CHROMINANCE,		PACK C.B.A.
			AUDIO,TV DEMODULATOR)		(VEP02271C),SUB
					SERVO (1) PACK C.B.A
					(VEP02270A),SUB
					SERVO (2) PACK C.B.A
					(VEP02272A),
					LUMINANCE &
					CHROMINANCE PACK
					C.B.A.(VEP03442A),
					TV DEMODULATOR PACK
					C.B.A.(VEP07348G),
					TUNER ARU PACK
					C.B.A.(VEP07349F)
		VEP02271C	SERVO PACK C.B.A.	1	
					INCLUDING THE SUB
					SERVO (1) PACK C.B.A.
					(VEP02270A), SUB
					SERVO (2) PACK C.B.A.
					(VEP02272A) THESE
					PARTS LIST ARE
					INCLUDED IN MAIN
					C.B.A.
					(VEP03407A:NV-G21PX)
					(VEP03407E:NV-G21BR)
		VEP02270A	SUB SERVO (1) PACK C.B.A.	1	
					PART LIST IS
					INCLUDED IN MAIN
					C.B.A.
					(VEP03407A:NV-G21PX)
					(VEP03407E:NV-G21BR)
		VEP02272A	SUB SERVO (2) PACK C.B.A.	1	
					PART LIST IS
					INCLUDED IN MAIN
					C.B.A.
					(VEP03407A:NV-G21PX)
					(VEP03407E:NV-G21BR)
		VEP03406A	LUMINANCE & CHROMINANC	1	NV-G21PX
			PACK C.B.A.		PART LIST IS
					INCLUDED IN MAIN
					C.B.A.(VEP03407A)

Ref.No.		Part No.	Part Name & Description	Pcs	Remarks
		VEP03442A	LUMINANCE & CHROMINANC	1	NV-G21BR
			PACK C.B.A.		INCLUDING THE
					NTSC-PAL(M) CONVERTER
					C.B.A.(VEP3408A) &
					AUTO DETECT C.B.A.
					(VEP03409A) AND THEY
					ARE INCLUDED IN MAIN
					C.B.A.(VEP03407E)
		VEP05097A	HEAD AMP PACK C.B.A.	1	
		VEP06403A	OPERATION C.B.A.	1	NV-G21PX
		VEP06403B	OPERATION C.B.A.	1	NV-G21BR
		VEP07402A	TIMER C.B.A.	1	NV-G21PX
					INCLUDING THE IR
					RECIEVER C.B.A.
					(VEP06380C)
		VEP07402C	TIMER C.B.A.	1	NV-G21BR
					INCLUDING THE IR
					RECIEVER C.B.A.
					(VEP06380C)
		VEP06380C	IR RECIEVER C.B.A.	1	
					PART LIST IS
					INCLUDED IN TIMER
					C.B.A.
					(VEP07402A:NV-G21PX)
					(VEP07402C:NV-G21BR)
		VEP07348F	TV DEMODULATOR PACK C.B.A.	1	NV-G21PX
					PART LIST IS
					INCLUDED IN MAIN
					C.B.A.(VEP03407A)
		VEP07348G	TV DEMODULATOR PACK C.B.A.	1	NV-G21BR
					PART LIST IS
					INCLUDED IN MAIN
					C.B.A.(VEP03407E)
		VEP07349H	TUNER ARU PACK C.B.A.	1	NV-G21PX
					PART LIST IS
					INCLUDED IN MAIN
					C.B.A.(VEP03407A)
		VEP07349F	TUNER ARU PACK C.B.A.	1	NV-G21BR
					PART LIST IS
					INCLUDED IN MAIN
					C.B.A.(VEP03407E)
		VEP01272A	POWER C.B.A.	1	
					INCLUDING THE SUB
					POWER C.B.A.
					(VEP00J51A)
		VEP00J51A	SUB POWER C.B.A.	1	

Ref.No.		Part No.	Part Name & Description	Pcs	Remarks
					PART LIST IS
					INCLUDED IN POWER
					C.B.A.(VEP01272A)
		TNV56809F2	TUNER	1	NV-G21PX<!>
		TNV76803F2	TUNER	1	NV-G21BR<!>
		VEQ0536	RF CONVERTER	1	<!>
		VEP66017A	REMOTE CONTROL UNIT C.B.A.	1	NV-G21PX
		VEP22063C	REMOTE CONTROL UNIT C.B.A.	1	NV-G21BR
		VEP00H22A	CYLINDER DRIVE C.B.A.	1	
		VEP00J52A	MECHANISM CONNECTION C.B.A.	1	
		VEP00H31A	REEL SENSOR C.B.A.	1	
		VXA2689	LED C.B.A.	1	
		VEP00H34A	PHOTO TR(T) C.B.A.	1	
		VEP00H35A	PHOTO TR(S) C.B.A.	1	
	■	VEP03407E	MAIN C.B.A.		NV-G21BR<!>
			(SYSTEM CONTROL,SERVO,		
			LUMINANCE & CHROMINANCE,		
			AUDIO,TV DEMODULATOR)		
			CONNECTORS		
BP2001		VJP1806	CONNECTOR	1	
BP3001		VJP1808	CONNECTOR	1	
BP3002		VJP1256	CONNECTOR (MALE)	1	
BP6001		VJP1263	CONNECTOR (MALE)	1	
BP6003		VJP1809	CONNECTOR	1	
BP8102		VJP1253	CONNECTOR	1	
BP8102		VJP1804	CONNECTOR	1	
			CAPACITORS		
C202		ECEA1HKR47	ELECTROLYTIC 50V 0.47U	1	
C203		ECUX1H562KBN	CHIP 50V 5600P	1	
C204		ECEA1CKN100	ELECTROLYTIC 16V 10U	1	
C205		ECQV1H473JZ	MYLAR 50V 0.047U	1	
C206		ECEA1CK100	ELECTROLYTIC 16V 10U	1	
C207		ECEA1CK100	ELECTROLYTIC 16V 10U	1	
C208		ECEA1HKN010	ELECTROLYTIC 50V 1U	1	
C209		ECEA1HKN010	ELECTROLYTIC 50V 1U	1	
C210		ECEA0JK220	ELECTROLYTIC 6.3V 22U	1	
C211		ECEA0JK220	ELECTROLYTIC 6.3V 22U	1	
C212		ECQV1H104JZ	MYLAR 50V 0.1U	1	
C213		ECQV1H683JZ	MYLAR 50V 0.068U	1	
C214		ECUX1H102KBN	CHIP 50V 1000P	1	

Ref.No.		Part No.	Part Name & Description	Pcs	Remarks
C215		ECEA1HKNR47	ELECTROLYTIC 50V 0.47U	1	
C216		ECQV1H473JZ	MYLAR 50V 0.047U	1	
C217		ECEA1HKR47	ELECTROLYTIC 50V 0.47U	1	
C218		ECUX1H472KBN	CHIP 50V 4700P	1	
C219		ECQV1H274JZ	MYLAR 50V 0.27U	1	
C220		ECUX1H103ZFN	CHIP 50V 0.01U	1	
C221		ECQV1H104JZ	MYLAR 50V 0.1U	1	
C222		ECQB1H103JH	MYLAR 50V 0.01U	1	
C223		ECUX1H562KBN	CHIP 50V 5600P	1	
C224		ECEA0JK470	ELECTROLYTIC 6.3V 47U	1	
C225		ECEA0JK470	ELECTROLYTIC 6.3V 47U	1	
C226		ECUX1H102KBN	CHIP 50V 1000P	1	
C227		ECUX1H332KBN	CHIP 50V 3300P	1	
C229		ECQB1H472JH	MYLAR 50V 4700P	1	
C230		ECEA1CKN100	ELECTROLYTIC 16V 10U	1	
C231		ECEA1HK010	ELECTROLYTIC 50V 1U	1	
C232		ECEA1CK100	ELECTROLYTIC 16V 10U	1	
C234		ECUX1H102KBN	CHIP 50V 1000P	1	
C236		ECQB1H223KH	MYLAR 50V 0.022U	1	
C237		ECQB1H562JH	MYLAR 50V 5600P	1	
C238		ECEA0JK101	ELECTROLYTIC 6.3V 100U	1	
C239		ECEA0JK221	ELECTROLYTIC 6.3V 220U	1	
C240		ECEA1CK100	ELECTROLYTIC 16V 10U	1	
C241		ECEA0JK470	ELECTROLYTIC 6.3V 47U	1	
C242		ECUX1H103ZFN	CHIP 50V 0.01U	1	
C243		ECUX1H103ZFN	CHIP 50V 0.01U	1	
C244		ECEA1EK4R7	ELECTROLYTIC 25V 4.7U	1	
C245		ECUX1H562KBN	CHIP 50V 5600P	1	
C246		ECQV1H104JZ	MYLAR 50V 0.1U	1	
C247		ECEA1CK100	ELECTROLYTIC 16V 10U	1	
C248		ECUX1H102KBN	CHIP 50V 1000P	1	
C249		ECCF1H101JC	CERAMIC 50V 100P	1	
C250		ECCF1H151JC	CERAMIC 50V 150P	1	
C251		ECCF1H180JC	CERAMIC 50V 18P	1	
C252		ECEA0JK470	ELECTROLYTIC 6.3V 47U	1	
C253		ECKF1H103ZF	CERAMIC 50V 0.01U	1	
C254		VCYD1C473MR1	SEMICONDUCTOR 16V 0.047U	1	
C271		ECEA1CK100	ELECTROLYTIC 16V 10U	1	
C272		ECEA1EK3R3	ELECTROLYTIC 25V 3.3U	1	
C273		ECKF1H182KB	CERAMIC 50V 1800P	1	
C301		ECEA0JK220	ELECTROLYTIC 6.3V 22U	1	
C302		ECEA0JU221	ELECTROLYTIC 6.3V 220U	1	
C303		ECUX1H221KN	CHIP 50V 220P	1	
C304		ECEA1EK3R3	ELECTROLYTIC 25V 3.3U	1	
C305		ECUX1H121JCN	CHIP 50V 120P	1	
C306		ECEA0JK101	ELECTROLYTIC 6.3V 100U	1	
C307		ECUX1H103ZFN	CHIP 50V 0.01U	1	
C308		ECEA1CK100	ELECTROLYTIC 16V 10U	1	
C309		ECEA1CK100	ELECTROLYTIC 16V 10U	1	
C310		ECEA0JK220	ELECTROLYTIC 6.3V 22U	1	
C311		ECUX1H820JCN	CHIP 50V 82P	1	
C313		ECUX1H121JCN	CHIP 50V 120P	1	
C314		ECUX1H220JCN	CHIP 50V 22P	1	
C315		ECEA1CK101	ELECTROLYTIC 16V 100U	1	
C317		ECUX1H121JCN	CHIP 50V 120P	1	
C319		ECUX1H151JCN	CHIP 50V 150P	1	
C320		ECUX1H330JCN	CHIP 50V 33P	1	
C321		ECUX1H101JCN	CHIP 50V 100P	1	
C322		ECEA0JU221	ELECTROLYTIC 6.3V 220U	1	
C323		ECEA1EK3R3	ELECTROLYTIC 25V 3.3U	1	
C324		ECUX1H103ZFN	CHIP 50V 0.01U	1	
C326		ECUX1H470JCN	CHIP 50V 47P	1	
C327		ECEA1EK3R3	ELECTROLYTIC 25V 3.3U	1	
C328		ECEA1EK3R3	ELECTROLYTIC 25V 3.3U	1	
C329		ECEA1EKN3R3	ELECTROLYTIC 25V 3.3U	1	
C330		ECEA1HK2R2	ELECTROLYTIC 50V 2.2U	1	
C331		ECEA1HK010	ELECTROLYTIC 50V 1U	1	
C332		ECEA1HKR47	ELECTROLYTIC 50V 0.47U	1	
C701		ECEA1CKS220	ELECTROLYTIC 16V 22U	1	
C702		ECEA1CKS100	ELECTROLYTIC 16V 10U	1	
C703		ECEA1HK2R2	ELECTROLYTIC 50V 2.2U	1	
C705		ECEA1CKS100	ELECTROLYTIC 16V 10U	1	
C706		ECQV1H823JZ	MYLAR 50V 0.082U	1	
C707		ECEA1HK0R1	ELECTROLYTIC 50V 0.1U	1	
C708		ECEA1CKS220	ELECTROLYTIC 16V 22U	1	

Ref.No.		Part No.	Part Name & Description			Pcs	Remarks
C709		ECEA1CKS220	ELECTROLYTIC	16V	22U	1	
C710		ECUX1H103ZFN	CHIP	50V	0.01U	1	
C715		ECUX1H103ZFN	CHIP	50V	0.01U	1	
C716		ECUX1H103ZFN	CHIP	50V	0.01U	1	
C717		ECUX1H103ZFN	CHIP	50V	0.01U	1	
C718		ECUX1H103ZFN	CHIP	50V	0.01U	1	
C719		ECUX1H103ZFN	CHIP	50V	0.01U	1	
C720		ECUX1H103ZFN	CHIP	50V	0.01U	1	
C721		ECEA1HKR27	ELECTROLYTIC	50V	0.27U	1	
C722		ECUX1H103ZFN	CHIP	50V	0.01U	1	
C723		ECUX1H220JCN	CHIP	50V	22P	1	
C725		ECQV1H104JZ	MYLAR	50V	0.1U	1	
C728		ECUX1H103ZFN	CHIP	50V	0.01U	1	
C730		ECEA1CKS100	ELECTROLYTIC	16V	10U	1	
C731		ECEA1CK100	ELECTROLYTIC	16V	10U	1	
C732		ECQV1H224JZ	MYLAR	50V	0.22U	1	
C734		ECUX1H103ZFN	CHIP	50V	0.01U	1	
C735		ECUX1H080DCN	CHIP	50V	80P	1	
C736		ECQB1H103JH	MYLAR	50V	0.01U	1	
C737		ECUX1H331JCN	CHIP	50V	330P	1	
C739		ECEA1HK010	ELECTROLYTIC	50V	1U	1	
C740		ECUX1H103ZFN	CHIP	50V	0.01U	1	
C741		ECEA1CK100	ELECTROLYTIC	16V	10U	1	
C743		ECUX1H270JSN	CHIP	50V	27P	1	
C744		ECEA1HKR47	ELECTROLYTIC	50V	0.47U	1	
C745		ECUX1H470JPN	CHIP	50V	47P	1	
C746		ECUX1H100DCN	CHIP	50V	10P	1	
C747		ECUX1H103ZFN	CHIP	50V	0.01U	1	
C748		ECEA1CK330	ELECTROLYTIC	16V	33U	1	
C749		ECEA1CK100	ELECTROLYTIC	16V	10U	1	
C760		ECQV1H823JZ	MYLAR	50V	0.082U	1	
C781		ECUX1H470JCN	CHIP	50V	47P	1	
C782		ECCF1H060DC	CERAMIC	50V	6P	1	
C801		ECUX1H220JCN	CHIP	50V	22P	1	
C802		ECEA1EK3R3	ELECTROLYTIC	25V	3.3U	1	
C803		ECEA1HK010	ELECTROLYTIC	50V	1U	1	
C804		ECUX1H222KBN	CHIP	50V	2200P	1	
C805		ECEA1HK010	ELECTROLYTIC	50V	1U	1	
C806		ECEA0JK220	ELECTROLYTIC	6.3V	22U	1	
C807		ECUX1H080DCN	CHIP	50V	8P	1	
C808		ECUX1H102KBN	CHIP	50V	1000P	1	
C809		ECEA0JK470	ELECTROLYTIC	6.3V	47U	1	
C810		ECUX1H103ZFN	CHIP	50V	0.01U	1	
C811		ECUX1H271JN	CHIP	50V	270P	1	
C812		ECEA1CZ330	ELECTROLYTIC	10V	33U	1	
C813		ECUX1H271JN	CHIP	50V	270P	1	
C814		ECUX1H471KBN	CHIP	50V	470P	1	
C815		ECUX1H390JCN	CHIP	50V	39P	1	
C820		ECQV1H823JZ	MYLAR	50V	0.082U	1	
C2001		ECQB1H333JH	MYLAR	50V	0.033U	1	
C2002		ECQB1H333JH	MYLAR	50V	0.033U	1	
C2003		ECQB1H333JH	MYLAR	50V	0.033U	1	
C2004		ECEA1HK2R2	ELECTROLYTIC	50V	2.2U	1	
C2005		ECEA1HK2R2	ELECTROLYTIC	50V	2.2U	1	
C2006		ECEA1HK2R2	ELECTROLYTIC	50V	2.2U	1	
C2007		ECQB1H223JH	MYLAR	50V	0.022U	1	
C2008		ECQV1H104JZ	MYLAR	50V	0.1U	1	
C2009		ECEA1HKN010	ELECTROLYTIC	50V	1U	1	
C2011		ECEA1CK101	ELECTROLYTIC	16V	100U	1	
C2018		ECQV1H104JZ	MYLAR	50V	0.1U	1	
C2019		ECEA1CK470	ELECTROLYTIC	16V	47U	1	
C2021		VCYD1C104MR1	SEMICONDUCTOR	16V	0.1U	1	
C2022		ECUX1H332KBN	CHIP	50V	3300P	1	
C2023		ECUX1H332KBN	CHIP	50V	3300P	1	
C2024		ECUX1H332KBN	CHIP	50V	3300P	1	
C2025		ECEA1EU221	ELECTROLYTIC	25V	220U	1	
C2027		ECQV1H474JZ	MYLAR	50V	0.47U	1	
C2701		ECEA0JK470	ELECTROLYTIC	6.3V	47U	1	
C2702		ECQV1H224JZ	MYLAR	50V	0.22U	1	
C3001		ECEA1CK470	ELECTROLYTIC	16V	47U	1	
C3002		ECEA0JU471	ELECTROLYTIC	6.3V	470U	1	
C3003		ECEA1CK100	ELECTROLYTIC	16V	10U	1	
C3004		ECUX1H820JCN	CHIP	50V	82P	1	
C3005		ECUX1H391JN	CHIP	50V	390P	1	
C3006		ECUX1H180JCN	CHIP	50V	18P	1	

Ref.No.		Part No.	Part Name & Description			Pcs	Remarks
C3007		ECEA0JK470	ELECTROLYTIC	6.3V	47U	1	
C3008		ECEA1HK010	ELECTROLYTIC	50V	1U	1	
C3012		ECUX1H180JCN	CHIP	50V	18P	1	
C4001		ECQB1H392JH	MYLAR	50V	3900P	1	
C4002		ECUX1H102KBN	CHIP	50V	1000P	1	
C4003		ECEA1CK330	ELECTROLYTIC	16V	33U	1	
C4004		ECEA1HK010	ELECTROLYTIC	50V	1U	1	
C4005		ECEA1AK220	ELECTROLYTIC	10V	22U	1	
C4006		ECEA1CK100	ELECTROLYTIC	16V	10U	1	
C4007		ECEA50MK1	ELECTROLYTIC	35V	1U	1	
C4008		ECUX1H331KBN	CHIP	50V	330P	1	
C4009		ECUX1H102KBN	CHIP	50V	1000P	1	
C4010		ECQB1H103JH	MYLAR	50V	0.01U	1	
C4011		ECEA16M10	ELECTROLYTIC	16V	10U	1	
C4012		ECEA1HK010	ELECTROLYTIC	50V	1U	1	
C4013		ECEA1AK220	ELECTROLYTIC	10V	22U	1	
C4014		ECEA1CK470	ELECTROLYTIC	16V	47U	1	
C4015		ECEA1CK100	ELECTROLYTIC	16V	10U	1	
C4016		ECEA1CK100	ELECTROLYTIC	16V	10U	1	
C4017		ECQB1H223JH	MYLAR	50V	0.022U	1	
C4018		ECQB1H333JH	MYLAR	50V	0.033U	1	
C4019		ECQB1H273KH	MYLAR	50V	0.027U	1	
C4020		ECEA1CK100	ELECTROLYTIC	16V	10U	1	
C4021		ECUX1H102KBN	CHIP	50V	1000P	1	
C4022		ECQB1H153KH	MYLAR	50V	0.015U	1	
C4023		ECEA1CK470	ELECTROLYTIC	16V	47U	1	
C4024		ECQP1222JZ	MYLAR	100V	2200P	1	
C4025		ECEA1CK470	ELECTROLYTIC	16V	47U	1	
C4026		ECQV1H563JZ	MYLAR	50V	0.056U	1	
C4027		ECQV1H184JZ	MYLAR	50V	0.18U	1	
C6001		ECEA0JK220	ELECTROLYTIC	6.3V	22U	1	
C6007		ECQV1H104JZ	MYLAR	50V	0.1U	1	
C6011		ECUX1E103KBN	CHIP	25V	0.01U	1	
C6012		ECUX1E103KBN	CHIP	25V	0.01U	1	
C6014		ECUX1H221KN	CHIP	50V	220P	1	
C6017		ECEA0JK470	ELECTROLYTIC	6.3V	47U	1	
C6018		ECEA0JK470	ELECTROLYTIC	6.3V	47U	1	
C6019		ECEA0JK470	ELECTROLYTIC	6.3V	47U	1	
C6020		ECUX1E103KBN	CHIP	25V	0.01U	1	
C6022		ECEA0JK330	ELECTROLYTIC	6.3V	33U	1	
C6023		ECKF1H103ZF	CERAMIC	50V	0.01U	1	
C6024		ECEA1CK330	ELECTROLYTIC	16V	33U	1	
C6025		ECUX1H102KBN	CHIP	50V	1000P	1	
C6026		ECEA0JU101	ELECTROLYTIC	6.3V	100U	1	
C6030		ECUX1H271KBN	CHIP	50V	270P	1	
C6031		ECUX1H271KBN	CHIP	50V	270P	1	
C6032		ECUX1H271KBN	CHIP	50V	270P	1	
C6033		ECUX1H222KBN	CHIP	50V	2200P	1	
C6034		ECUX1H222KBN	CHIP	50V	2200P	1	
C7518		EECF5R5U105	GOLD	5.5V	1.0F	1	
C7551		ECQV1H104JZ	MYLAR	50V	0.1U	1	
C7552		ECEA1HK010	ELECTROLYTIC	50V	1U	1	
C7553		ECEA1CK100	ELECTROLYTIC	16V	10U	1	
C7554		ECEA1VK220	ELECTROLYTIC	35V	22P	1	
C7555		ECQB1H273KH	MYLAR	50V	0.027U	1	
C7556		ECQV1H823JZ	MYLAR	50V	0.082U	1	
C7557		ECQV1H683JZ	MYLAR	50V	0.068U	1	
C7558		ECUX1H103ZFN	CHIP	50V	0.01U	1	
C7559		ECQV1H104JZ	MYLAR	50V	0.1U	1	
C7560		ECUX1H103ZFN	CHIP	50V	0.01U	1	
C7561		ECQV1H104JZ	MYLAR	50V	0.1U	1	
C7563		ECEA1HK010	ELECTROLYTIC	50V	1U	1	
C7564		ECEA1CK220	ELECTROLYTIC	16V	22U	1	
C7565		ECUX1H103ZFN	CHIP	50V	0.01U	1	
C7566		ECUX1H103ZFN	CHIP	50V	0.01U	1	
C7567		ECEA1HKN010	ELECTROLYTIC	50V	1U	1	
C7568		ECUX1H103ZFN	CHIP	50V	0.01U	1	
C7570		ECEA1CK100	ELECTROLYTIC	16V	10U	1	
C8001		ECUX1H103ZFN	CHIP	50V	0.01U	1	
C8002		ECUX1H103ZFN	CHIP	50V	0.01U	1	
C8101		ECKF1H103ZF	CERAMIC	50V	0.01U	1	
C8102		ECKF1H103ZF	CERAMIC	50V	0.01U	1	
C8103		ECKF1H103ZF	CERAMIC	50V	0.01U	1	
C8104		ECKF1H103ZF	CERAMIC	50V	0.01U	1	
C8105		ECKF1H103ZF	CERAMIC	50V	0.01U	1	

Ref.No.		Part No.	Part Name & Description	Pcs	Remarks
C8106		ECCF1H470J	CERAMIC 50V 47P	1	
C8107		ECKF1H103ZF	CERAMIC 50V 0.01U	1	
C8108		ECKF1H103ZF	CERAMIC 50V 0.01U	1	
C8109		ECKF1H103ZF	CERAMIC 50V 0.01U	1	
C8110		ECKF1H103ZF	CERAMIC 50V 0.01U	1	
C8111		ECEA1AK470	ELECTROLYTIC 10V 47U	1	
C8112		ECKF1H103ZF	CERAMIC 50V 0.01U	1	
C8113		ECKF1H103ZF	CERAMIC 50V 0.01U	1	
C8114		ECKF1H103ZF	CERAMIC 50V 0.01U	1	
C8115		ECKF1H103ZF	CERAMIC 50V 0.01U	1	
C8116		ECCF1H470J	CERAMIC 50V 47P	1	
C8117		ECCF1H101J	CERAMIC 50V 100P	1	
C8118		ECCF1H101J	CERAMIC 50V 100P	1	
C8119		ECKF1H103ZF	CERAMIC 50V 0.01U	1	
C8120		ECKF1H103ZF	CERAMIC 50V 0.01U	1	
C8121		ECKF1H103ZF	CERAMIC 50V 0.01U	1	
C8122		ECKF1H103ZF	CERAMIC 50V 0.01U	1	
C8123		ECKF1H103ZF	CERAMIC 50V 0.01U	1	
C8124		ECKF1H103ZF	CERAMIC 50V 0.01U	1	
C8125		ECCF1H271J	CERAMIC 50V 270P	1	
C8126		ECEA0JK470	ELECTROLYTIC 6.3V 47U	1	
C8127		ECKF1H103ZF	CERAMIC 50V 0.01U	1	
C8129		ECKF1H102KB	CERAMIC 50V 1000P	1	
C8201		ECQB1H103JH	MYLAR 50V 0.01U	1	
C8202		ECKF1H103ZF	CERAMIC 50V 0.01U	1	
C8203		ECKF1H103ZF	CERAMIC 50V 0.01U	1	
C8204		ECKF1H103ZF	CERAMIC 50V 0.01U	1	
C8205		ECQB1H103JH	MYLAR 50V 0.01U	1	
C8206		ECEA1CK100	ELECTROLYTIC 16V 10U	1	
C8207		ECQB1H103JH	MYLAR 50V 0.01U	1	
C8208		ECQB1H103JH	MYLAR 50V 0.01U	1	
C8209		ECEA1CK220	ELECTROLYTIC 16V 22U	1	
C8210		ECQB1H103JH	MYLAR 50V 0.01U	1	
C8211		ECQB1H103JH	MYLAR 50V 0.01U	1	
C8213		ECKF1H102KB	CERAMIC 50V 1000P	1	
C8214		ECEA1CK330	ELECTROLYTIC 16V 33U	1	
C8215		ECQV1H563JZ	MYLAR 50V 0.056U	1	
C8216		ECEA1AK470	ELECTROLYTIC 10V 47U	1	
C8217		ECEA1CK100	ELECTROLYTIC 16V 10U	1	
C8218		ECKF1H102KB	CERAMIC 50V 1000P	1	
C8219		ECEA1CK330	ELECTROLYTIC 16V 33U	1	
C8220		ECQB1H103JH	MYLAR 50V 0.01U	1	
			DIODES		
D201		1SS254	DIODE	1	
D202		1SS254	DIODE	1	
D302		MA221	DIODE	1	
D303		1SS283	DIODE	1	
D304		1SS283	DIODE	1	
D305		1SS283	DIODE	1	
D306		MA221	DIODE	1	
D307		1SS283	DIODE	1	
D308		MA221	DIODE	1	
D309		MA221	DIODE	1	
D710		MA3100L	DIODE	1	
D712		MA29W	DIODE	1	
D2001		1SS254	DIODE	1	
D2002		1SS254	DIODE	1	
D2003		1SS254	DIODE	1	
D2004		1SS254	DIODE	1	
D2007		1SS254	DIODE	1	
D2008		1SS254	DIODE	1	
D2009		1SS254	DIODE	1	
D3001		1SS254	DIODE	1	
D3002		1SS254	DIODE	1	
D3003		1SS254	DIODE	1	
D3004		11ES1	DIODE	1	
D6001		11ES1	DIODE	1	
D6002		1SS254	DIODE	1	
D6005		1SS254	DIODE	1	
D6009		1SS254	DIODE	1	
D6010		1SS254	DIODE	1	
D6011		1SS254	DIODE	1	
D6012		1SS254	DIODE	1	

Ref.No.		Part No.	Part Name & Description	Pcs	Remarks
D6017		11ES1	DIODE	1	
D6019		MA4150M	DIODE	1	(L)
D6020		MA4110M	DIODE	1	(L)
D6021		1SS254	DIODE	1	
D6022		1SS254	DIODE	1	
D6023		1SS254	DIODE	1	
D6024		1SS254	DIODE	1	
D6028		1SS254	DIODE	1	
D6029		1SS254	DIODE	1	
D6030		1SS254	DIODE	1	
D6031		1SS254	DIODE	1	
D7551		1SS254	DIODE	1	
D7552		ERA15-01	DIODE	1	
D7553		1SS254	DIODE	1	
D7554		LN28WPVT	LED	1	
D7555		MA29W	DIODE	1	
D8101		1SS254	DIODE	1	
D8102		1SS254	DIODE	1	
D8103		1SS254	DIODE	1	
D8104		1SS254	DIODE	1	
D8105		1SS254	DIODE	1	
D8106		1SS254	DIODE	1	
D8107		1SS254	DIODE	1	
D8201		1SS254	DIODE	1	
D8202		1SS254	DIODE	1	
D8204		1SS254	DIODE	1	
			DELAY LINES		
DL301		VLD0077	DELAY LINE	1	
DL8101		VLD0092	DELAY LINE	1	
DL8102		VLD0093	DELAY LINE	1	
			FILTERS		
FL301		ELB41L021	FILTER	1	
FL801		VLF0330	FILTER	1	
FL802		ELB4K017	FILTER	1	
FL4001		VLF0332	FILTER	1	
			ICS		
IC201		UPD6160CA509	IC	1	
IC202		MN15311VJH	IC	1	
IC203		UPC358C	IC	1	
IC301		VEFY013	FIC	1	
IC701		M51366SP	IC	1	
IC801		VEFC012	FIC	1	
IC2001		BA6430S	IC	1	
IC2702		UPC358C	IC	1	
IC4001		BA7752LS	IC	1	
IC6001		MN15362VJR	IC	1	
IC6002		UPC393C	IC	1	
IC6003		UPD4510BC	IC	1	
IC6004		MN1280	IC	1	
IC7551		AN5034	IC	1	
IC8101		MN4053B	IC	1	
IC8102		MN4053B	IC	1	
IC8103		MN4013B	IC	1	
IC8201		TA7320P	IC	1	
IC8202		BA7025L	IC	1	
			COILS		
L202		VLQEL05F101K	COIL 100UH	1	
L301		VLQEL05F101K	COIL 100UH	1	
L302		VLQEL05F101K	COIL 100UH	1	
L303		VLQEL05F100K	COIL 10UH	1	
L304		VLQEL05F100K	COIL 10UH	1	
L306		VLQEL05F151K	COIL 150UH	1	
L308		VLQEL05F181K	COIL 180UH	1	
L309		VLQEL05F101K	COIL 100UH	1	

Ref.No.	Part No.	Part Name & Description	Pcs	Remarks
L310	VLQEL05F101K	COIL 100UH	1	
L311	VLQEL05F101K	COIL 100UH	1	
L312	VLQEL05F101K	COIL 100UH	1	
L701	VLQEL05F680K	COIL 68UH	1	
L702	VLQEL05F680K	COIL 68UH	1	
L711	ELQTR56XB	COIL	1	
L712	ELQTR47XB	COIL	1	
L713	ELQTR56XB	COIL	1	
L714	ELQT1R2KB	COIL	1	
L715	VLQ0213K560T	COIL	1	
L717	VLQEL05F680K	COIL 68UH	1	
L718	VLQEL05F680K	COIL 68UH	1	
L719	VLQEL05F150K	COIL 15UH	1	
L781	VLQEL05F680K	COIL 68UH	1	
L801	VLQEL05F470J	COIL 47UH	1	
L802	VLQEL05F220K	COIL 22UH	1	
L803	VLQEL05F221K	COIL 220UH	1	
L804	VLQEL05F331K	COIL 330UH	1	
L805	VLQEL05F101K	COIL 100UH	1	
L806	VLQEL05F101K	COIL 100UH	1	
L807	VLQEL05F470K	COIL 47UH	1	
L2001	VLQEL05F102K	COIL 1000UH	1	
L3001	VLQEL05F101K	COIL 100UH	1	
L3002	VLQEL05F101K	COIL 100UH	1	
L3003	VLQEL05F181K	COIL 180UH	1	
L3004	VLQEL05F150K	COIL 15UH	1	
L3005	VLQEL05F220K	COIL 22UH	1	
L3006	VLQEL05F1R0K	COIL	1	
L4001	VLQEL07F682J	COIL 6800UH	1	
L4002	VLQEL05F101K	COIL 100UH	1	
L7551	VLQEL05F102K	COIL 1000UH	1	
L7552	VLQEL05F101K	COIL 100UH	1	
L8101	VLQEL05F150K	COIL 15UH	1	
L8102	VLQEL05F220K	COIL 22UH	1	
L8103	VLQEL05F102K	COIL 1000UH	1	
L8201	VLQEL05F101K	COIL 100UH	1	
L8202	VLQEL05F101K	COIL 100UH	1	
		CONNECTORS		
P501	VJS1741T	CONNECTOR	1	
P502	VJS1233T	CONNECTOR (FEMALE)	1	
P801	VJS1965	CONNECTOR	1	
P1504	VJS1745	CONNECTOR (FEMALE)	1	
P2002	VJP1932T	CONNECTOR (MALE)	1	
P2002	VJS1932	CONNECTOR (FEMALE)	1	
P3003	VJS1229T	CONNECTOR (FEMALE)	1	
P3004	VJS1737T	CONNECTOR	1	
P4001	VJP1233R	CONNECTOR(MALE) 6P	1	
P6002	VJS1935	CONNECTOR (FEMALE)	1	
P6004	VJS1467	CONNECTOR(FEMALE)	1	
P6201	VJS1743T	CONNECTOR	1	
P8102	VJP1230T	CONNECTOR(MALE) 3P	1	
P8103	VJP1229T	CONNECTOR(MALE) 2P	1	
		PACK PINS		
PK201	VJR0190	PACK PIN	1	
PK202	VJR0189	PACK PIN	1	
PK203	VJR0190	PACK PIN	1	
PK271	VJR0188	PACK PIN	1	
PK301	VJR0163	PACK PIN	1	
PK302	VJR0130	PACK PIN	1	
PK303	VJR0160	PACK PIN	1	
PK801	VJR0190	PACK PIN	1	
PK7501	VJR0244	PACK PIN	1	
		TRANSISTORS		
Q201	2SD636	TRANSISTOR	1	
Q202	2SD636	TRANSISTOR	1	
Q203	2SB641	TRANSISTOR	1	
Q204	2SB641	TRANSISTOR	1	
Q205	2SB641	TRANSISTOR	1	
Q206	2SB641	TRANSISTOR	1	

Ref.No.	Part No.	Part Name & Description	Pcs	Remarks
Q207	2SC2206	TRANSISTOR	1	(B,C)
Q208	2SD636	TRANSISTOR	1	
Q271	2SD636	TRANSISTOR	1	
Q272	2SD636	TRANSISTOR	1	
Q273	2SD636	TRANSISTOR	1	
Q274	2SD636	TRANSISTOR	1	
Q302	2SC2295	TRANSISTOR CHIP	1	(B,C)
Q303	2SC2295	TRANSISTOR CHIP	1	(B,C)
Q304	2SD601	TRANSISTOR CHIP	1	(Q,R,S)
Q305	2SB709	TRANSISTOR CHIP	1	(Q,R,S)
Q306	2SB709	TRANSISTOR CHIP	1	(Q,R,S)
Q307	2SD601	TRANSISTOR CHIP	1	(Q,R,S)
Q309	2SD601	TRANSISTOR CHIP	1	(Q,R,S)
Q310	2SD601	TRANSISTOR CHIP	1	(Q,R,S)
Q703	2SD601	TRANSISTOR CHIP	1	(S)
Q710	2SC2377	TRANSISTOR	1	(C)
Q712	2SD638	TRANSISTOR	1	(Q,R,S)
Q713	2SD1328	TRANSISTOR CHIP	1	(S,T)
Q714	2SD601	TRANSISTOR CHIP	1	(Q,R,S)
Q801	2SB709	TRANSISTOR CHIP	1	(Q,R,S)
Q2001	2SB641	TRANSISTOR	1	(Q,R,S)
Q2002	2SD636	TRANSISTOR	1	(Q,R,S)
Q3001	2SB641	TRANSISTOR	1	(Q,R,S)
Q3002	2SB641	TRANSISTOR	1	(Q,R,S)
Q3003	2SC2206	TRANSISTOR	1	(B,C)
Q4001	2SD636	TRANSISTOR	1	(R)
Q4002	2SD958	TRANSISTOR	1	(S,T)
Q4003	2SD958	TRANSISTOR	1	(S,T)
Q4004	2SB788	TRANSISTOR	1	(R,S,T)
Q4005	2SD636	TRANSISTOR	1	(Q,R,S)
Q4006	2SD636	TRANSISTOR	1	(Q,R,S)
Q6006	2SB643	TRANSISTOR	1	(Q,R,S)
Q6007	2SB790	TRANSISTOR	1	(Q,R,S)
Q6009	2SB790	TRANSISTOR	1	(Q,R,S)
Q6016	2SD1275	TRANSISTOR	1	(P,Q,R)
Q6017	2SD893	TRANSISTOR	1	
Q6018	2SD973	TRANSISTOR	1	(Q,R,S)
Q6019	2SD638	TRANSISTOR	1	(Q,R,S)
Q7551	2SB644	TRANSISTOR	1	(Q,R,S)
Q7552	2SB644	TRANSISTOR	1	(Q,R,S)
Q7553	2SC3311	TRANSISTOR	1	
Q8001	2SD636	TRANSISTOR	1	(Q,R,S)
Q8101	2SD636	TRANSISTOR	1	(Q,R,S)
Q8102	2SD636	TRANSISTOR	1	(Q,R,S)
Q8103	2SD636	TRANSISTOR	1	(Q,R,S)
Q8104	2SD636	TRANSISTOR	1	(Q,R,S)
Q8105	2SD636	TRANSISTOR	1	(Q,R,S)
Q8106	2SD636	TRANSISTOR	1	(Q,R,S)
Q8107	2SD636	TRANSISTOR	1	(Q,R,S)
Q8108	2SD636	TRANSISTOR	1	(Q,R,S)
Q8109	2SD636	TRANSISTOR	1	(Q,R,S)
Q8110	2SD636	TRANSISTOR	1	(Q,R,S)
Q8111	2SD636	TRANSISTOR	1	(Q,R,S)
Q8112	2SD636	TRANSISTOR	1	(Q,R,S)
Q8115	2SD636	TRANSISTOR	1	(Q,R,S)
Q8119	2SB641	TRANSISTOR	1	(Q,R,S)
Q8120	2SD636	TRANSISTOR	1	(Q,R,S)
Q8201	2SD636	TRANSISTOR	1	(Q,R,S)
Q8202	2SD636	TRANSISTOR	1	(Q,R,S)
Q8203	2SB641	TRANSISTOR	1	(Q,R,S)
		COMBINATION PARTS		
QR201	DTA144EA	TRANSISTOR RESISTOR	1	
QR202	DTA144EA	TRANSISTOR RESISTOR	1	
QR203	UN1212	TRANSISTOR-RESISTOR	1	
QR301	UN2213	TRANSISTOR-RESISTOR	1	
QR304	UN2214	TRANSISTOR-RESISTOR	1	
QR306	UN2213	TRANSISTOR-RESISTOR	1	
QR307	UN2213	TRANSISTOR-RESISTOR	1	
QR701	UN2213	TRANSISTOR-RESISTOR	1	
QR702	UN2213	TRANSISTOR-RESISTOR	1	
QR711	UN2212	TRANSISTOR-RESISTOR	1	
QR712	UN2212	TRANSISTOR-RESISTOR	1	
QR713	UN2211	TRANSISTOR-RESISTOR	1	

Ref.No.		Part No.	Part Name & Description	Pcs	Remarks
QR2003		UN1112	TRANSISTOR-RESISTOR	1	
QR2004		UN1113	TRANSISTOR-RESISTOR	1	
QR2005		UN1213	TRANSISTOR-RESISTOR	1	
QR2006		UN1213	TRANSISTOR-RESISTOR	1	
QR2020		UN1212	TRANSISTOR-RESISTOR	1	
QR2025		UN1112	TRANSISTOR-RESISTOR	1	
QR2026		UN1213	TRANSISTOR-RESISTOR	1	
QR2027		UN1213	TRANSISTOR-RESISTOR	1	
QR2028		UN1213	TRANSISTOR-RESISTOR	1	
QR3001		UN1111	TRANSISTOR-RESISTOR	1	
QR3004		UN1213	TRANSISTOR-RESISTOR	1	
QR6001		UN1212	TRANSISTOR-RESISTOR	1	
QR6004		UN1213	TRANSISTOR-RESISTOR	1	
QR6005		UN1213	TRANSISTOR-RESISTOR	1	
QR6006		UN1111	TRANSISTOR-RESISTOR	1	
QR6008		UN1111	TRANSISTOR-RESISTOR	1	
QR6011		UN1212	TRANSISTOR-RESISTOR	1	
QR6012		UN1113	TRANSISTOR-RESISTOR	1	
QR6013		UN1213	TRANSISTOR-RESISTOR	1	
QR6014		UN1213	TRANSISTOR-RESISTOR	1	
QR8103		UN1213	TRANSISTOR-RESISTOR	1	
QR8104		UN1213	TRANSISTOR-RESISTOR	1	
QR8201		UN1213	TRANSISTOR-RESISTOR	1	
QR8202		UN1117	TRANSISTOR-RESISTOR	1	
QR8203		UN1213	TRANSISTOR-RESISTOR	1	
QR8204		UN1213	TRANSISTOR-RESISTOR	1	
			RESISTORS		
R201		ERJ6GMYJ393	CHIP 1/16W 39K	1	
R202		ERJ6GMYJ152	CHIP 1/16W 1.5K	1	
R203		ERJ6GMYJ103	CHIP 1/16W 10K	1	
R204		ERJ6GMYJ221	CHIP 1/16W 220	1	
R205		ERJ6GMYJ102	CHIP 1/16W 1K	1	
R206		ERJ6GMYJ392	CHIP 1/16W 3.9K	1	
R207		ERJ6GMYJ473	CHIP 1/16W 47K	1	
R208		ERJ6GMYJ222	CHIP 1/16W 2.2K	1	
R209		ERJ6GMYJ123	CHIP 1/16W 12K	1	
R210		ERJ6GMYJ274	CHIP 1/16W 270K	1	
R211		ERJ6GMYJ563	CHIP 1/16W 56K	1	
R212		ERJ6GMYJ154	CHIP 1/16W 150K	1	
R213		ERJ6GMYJ154	CHIP 1/16W 150K	1	
R214		ERJ6GMYJ224	CHIP 1/16W 220K	1	
R215		ERJ6GMYJ472	CHIP 1/16W 4.7K	1	
R216		ERJ6GMYJ103	CHIP 1/16W 10K	1	
R217		ERJ6GMYJ683	CHIP 1/16W 68K	1	
R218		ERJ6GMYJ333	CHIP 1/16W 33K	1	
R219		ERJ6GMYJ333	CHIP 1/16W 33K	1	
R220		ERJ6GMYJ823	CHIP 1/16W 82K	1	
R221		ERJ6GMYJ823	CHIP 1/16W 82K	1	
R222		ERJ6GMYJ332	CHIP 1/16W 3.3K	1	
R223		ERJ6GMYJ332	CHIP 1/16W 3.3K	1	
R224		ERJ6GMYJ561	CHIP 1/16W 560	1	
R225		ERJ6GMYJ222	CHIP 1/16W 2.2K	1	
R226		ERJ6GMYJ102	CHIP 1/16W 1K	1	
R227		ERJ6GMYJ103	CHIP 1/16W 10K	1	
R228		ERJ6GMYJ393	CHIP 1/16W 39K	1	
R229		ERJ6GMYJ221	CHIP 1/16W 220	1	
R230		ERJ6GMYJ152	CHIP 1/16W 1.5K	1	
R231		ERJ6GMYJ152	CHIP 1/16W 1.5K	1	
R232		ERJ6GMYJ563	CHIP 1/16W 56K	1	
R233		ERJ6GMYJ563	CHIP 1/16W 56K	1	
R234		ERJ6GMYJ472	CHIP 1/16W 4.7K	1	
R235		ERJ6GMYJ333	CHIP 1/16W 33K	1	
R236		ERJ6GMYJ154	CHIP 1/16W 150K	1	
R237		ERJ6GMYJ154	CHIP 1/16W 150K	1	
R238		ERJ6GMYJ124	CHIP 1/16W 120K	1	
R239		ERJ6GMYJ222	CHIP 1/16W 2.2K	1	
R240		ERJ6GMYG333	CHIP 1/16W 33K	1	
R241		ERJ6GMYJ680	CHIP 1/16W 680K	1	
R242		ERJ6GMYJ154	CHIP 1/16W 150K	1	
R243		ERJ6GMYJ103	CHIP 1/16W 10K	1	
R244		ERJ6GMYJ223	CHIP 1/16W 22K	1	
R245		ERJ6GMYJ223	CHIP 1/16W 22K	1	

Ref.No.		Part No.	Part Name & Description	Pcs	Remarks
R246		ERJ6GMYJ103	CHIP 1/16W 10K	1	
R247		ERJ6GMYJ392	CHIP 1/16W 3.9K	1	
R248		ERJ6GMYJ223	CHIP 1/16W 22K	1	
R249		ERJ6GMYG472	CHIP 1/16W 4.7K	1	
R250		ERJ6GMYJ821	CHIP 1/16W 820	1	
R251		ERJ6GMYJ824	CHIP 1/16W 820K	1	
R252		ERJ6GMYJ473	CHIP 1/16W 47K	1	
R253		ERDS2TJ564	CARBON 1/4W 560K	1	
R256		ERJ6GMYJ123	CHIP 1/16W 12K	1	
R257		ERJ6GMYJ562	CHIP 1/16W 5.6K	1	
R258		ERJ6GMYJ683	CHIP 1/16W 68K	1	
R259		ERJ6GMYJ223	CHIP 1/16W 22K	1	
R260		ERJ6GMYJ223	CHIP 1/16W 22K	1	
R262		ERDS2TJ272	CARBON 1/4W 2.7K	1	
R263		ERDS2TJ750	CARBON 1/4W 75	1	
R264		ERDS2TJ183	CARBON 1/4W 18K	1	
R265		ERDS2TJ103	CARBON 1/4W 10K	1	
R266		ERJ6GMYJ563	CHIP 1/16W 56K	1	
R267		ERJ6GMYJ563	CHIP 1/16W 56K	1	
R268		ERJ6GMYJ562	CHIP 1/16W 5.6K	1	
R269		ERJ6GMYJ272	CHIP 1/16W 2.7K	1	
R271		ERDS2TJ222	CARBON 1/4W 2.2K	1	
R272		ERDS2TJ154	CARBON 1/4W 150K	1	
R273		ERDS2TJ153	CARBON 1/4W 15K	1	
R274		ERDS2TJ154	CARBON 1/4W 150K	1	
R275		ERDS2TJ102	CARBON 1/4W 1K	1	
R276		ERDS2TJ273	CARBON 1/4W 27K	1	
R277		ERDS2TJ681	CARBON 1/4W 680	1	
R278		ERDS2TJ104	CARBON 1/4W 100K	1	
R279		ERDS2TJ683	CARBON 1/4W 68K	1	
R301		ERJ6GMYJ393	CHIP 1/16W 39K	1	
R302		ERJ6GMYJ681	CHIP 1/16W 680	1	
R304		ERJ6GMYJ223	CHIP 1/16W 22K	1	
R305		ERJ6GMYJ223	CHIP 1/16W 22K	1	
R306		ERJ6GMYJ473	CHIP 1/16W 47K	1	
R307		ERJ6GMYJ153	CHIP 1/16W 15K	1	
R308		ERJ6GMYJ473	CHIP 1/16W 47K	1	
R309		ERJ6GMYJ473	CHIP 1/16W 47K	1	
R310		ERJ6GMYJ272	CHIP 1/16W 2.7K	1	
R311		ERJ6GMYJ821	CHIP 1/16W 820	1	
R312		ERJ6GMYJ472	CHIP 1/16W 4.7K	1	
R313		ERJ6GMYJ682	CHIP 1/16W 6.8K	1	
R314		ERJ6GMYJ182	CHIP 1/16W 1.8K	1	
R315		ERJ6GMYJ102	CHIP 1/16W 1K	1	
R316		ERJ6GMG273M	CHIP 1/16W 27K	1	
R317		ERJ6GMG822M	CHIP 1/16W 8.2K	1	
R318		ERJ6GMYJ272	CHIP 1/16W 2.7K	1	
R319		ERJ6GMYJ681	CHIP 1/16W 680	1	
R320		ERJ6GMYJ102	CHIP 1/16W 1K	1	
R321		ERJ6GMYJ182	CHIP 1/16W 1.8K	1	
R322		ERJ6GMYJ680	CHIP 1/16W 68	1	
R323		ERJ6GMYJ823	CHIP 1/16W 82K	1	
R324		ERJ6GMYJ102	CHIP 1/16W 1K	1	
R325		ERJ6GMYJ221	CHIP 1/16W 220	1	
R326		ERJ6GMYJ223	CHIP 1/16W 22K	1	
R327		ERJ6GMYJ152	CHIP 1/16W 1.5K	1	
R329		ERJ6GMYJ153	CHIP 1/16W 15K	1	
R330		ERJ6GMYJ182	CHIP 1/16W 1.8K	1	
R333		ERJ6GMYJ223	CHIP 1/16W 22K	1	
R334		ERJ6GMYJ223	CHIP 1/16W 22K	1	
R336		ERJ6GMYJ274	CHIP 1/16W 270K	1	
R337		ERJ6GMYJ680	CHIP 1/16W 680K	1	
R338		ERJ6GMYJ103	CHIP 1/16W 10K	1	
R340		ERJ6GMYJ223	CHIP 1/16W 22K	1	
R341		ERJ6GMYJ273	CHIP 1/16W 27K	1	
R707		ERJ6GEYJ103	CHIP 1/16W 10K	1	
R712		ERJ6GEYJ682	CHIP 1/16W 6.8K	1	
R713		ERJ6GEYJ681	CHIP 1/16W 680	1	
R714		ERD2FCG330	CARBON 2W 33	1	
R715		ERJ6GEYJ271	CHIP 1/16W 270	1	
R716		ERJ6GEYJ272	CHIP 1/16W 2.7K	1	
R717		ERJ6GEYJ332	CHIP 1/16W 3.3K	1	
R718		ERJ6GEYJ754	CHIP 1/16W 750K	1	
R719		ERJ6GEYJ682	CHIP 1/16W 6.8K	1	
R720		ERJ6GEYJ822	CHIP 1/16W 8.2K	1	

Ref.No.		Part No.	Part Name & Description		Pcs	Remarks
R721		ERJ6GEYJ272	CHIP	1/16W 2.7K	1	
R722		ERJ6GEYJ332	CHIP	1/16W 3.3K	1	
R723		ERJ6GEYJ183	CHIP	1/16W 180K	1	
R724		ERJ6GEYJ101	CHIP	1/16W 100	1	
R725		ERJ6GEYJ182	CHIP	1/16W 1.8K	1	
R726		ERDS2TJ472	CARBON	1/4W 4.7K	1	
R727		ERJ6GEYJ471	CHIP	1/16W 470	1	
R728		ERDS2TJ471	CARBON	1/4W 470	1	
R729		ERJ6GEYJ331	CHIP	1/16W 330	1	
R730		ERJ6GEYJ331	CHIP	1/16W 330	1	
R737		ERJ6GEYJ394	CHIP	1/16W 390K	1	
R738		ERJ6GEYJ274	CHIP	1/16W 270K	1	
R739		ERDS2TJ681	CARBON	1/4W 680	1	
R740		ERJ6GEYJ473	CHIP	1/16W 47K	1	
R741		ERJ6GEYJ272	CHIP	1/16W 2.7K	1	
R742		ERJ6GEYJ272	CHIP	1/16W 2.7K	1	
R743		ERDS2TJ470	CARBON	1/4W 47	1	
R744		ERJ6GEYJ821	CHIP	1/16W 820	1	
R745		ERJ6GEYJ331	CHIP	1/16W 330	1	
R746		ERDS2TJ151	CARBON	1/4W 150	1	
R750		ERJ6GEYJ182	CHIP	1/16W 1.8K	1	
R757		ERJ6GEYJ222	CHIP	1/16W 2.2K	1	
R759		ERDS2TJ103	CARBON	1/4W 10K	1	
R760		ERJ6GEYJ102	CHIP	1/16W 1K	1	
R763		ERJ6GEYJ103	CHIP	1/16W 10K	1	
R764		ERJ6GEYJ822	CHIP	1/16W 8.2K	1	
R781		ERJ6GEYJ271	CHIP	1/16W 270	1	
R782		ERJ6GEYJ391	CHIP	1/16W 390	1	
R792		ERJ6GEYJ120	CHIP	1/16W 12	1	
R801		ERJ6GMYJ122	CHIP	1/16W 1.2K	1	
R802		ERJ6GMYJ271	CHIP	1/16W 270	1	
R803		ERJ6GMYJ273	CHIP	1/16W 27K	1	
R804		ERJ6GMYJ821	CHIP	1/16W 820	1	
R805		ERJ8GCJ470M	CHIP	1/16W 47	1	
R807		ERJ6GMYJ122	CHIP	1/16W 1.2K	1	
R808		ERJ6GMYJ182	CHIP	1/16W 1.8K	1	
R809		ERJ6GMYJ222	CHIP	1/16W 2.2K	1	
R810		ERJ6GMYJ102	CHIP	1/16W 1K	1	
R811		ERJ6GMYJ471	CHIP	1/16W 470	1	
R812		ERJ6GMYJ473	CHIP	1/16W 47K	1	
R813		ERJ6GMYJ473	CHIP	1/16W 47K	1	
R814		ERJ6GMYJ102	CHIP	1/16W 1K	1	
R820		ERJ6GMYJ122	CHIP	1/16W 1.2K	1	
R2004		ERX12SJ1R0	METAL OXIDE	1/2W 1	1	
R2005		ERJ6GMYJ102	CHIP	1/16W 1K	1	
R2006		ERJ6GMYG562	CHIP	1/16W 5.6K	1	
R2007		ERJ6GMYJ472	CHIP	1/16W 4.7K	1	
R2008		ERJ6GMYJ682	CHIP	1/16W 6.8K	1	
R2009		ERJ6GMYJ562	CHIP	1/16W 5.6K	1	
R2010		ERJ6GMYJ223	CHIP	1/16W 22K	1	
R2011		ERJ6GMYJ223	CHIP	1/16W 22K	1	
R2012		ERJ6GMYJ103	CHIP	1/16W 10K	1	
R2013		ERJ6GMYJ473	CHIP	1/16W 47K	1	
R2014		ERJ6GMYJ222	CHIP	1/16W 2.2K	1	
R2015		ERJ6GMYJ102	CHIP	1/16W 1K	1	
R2016		ERJ6GMYJ103	CHIP	1/16W 10K	1	
R2017		ERDS2TJ332	CARBON	1/4W 3.3K	1	
R2018		ERDS2TJ330	CARBON	1/4W 33	1	
R2019		ERJ6GMYJ102	CHIP	1/16W 1K	1	
R2020		ERJ6GMYJ104	CHIP	1/16W 100K	1	
R2021		ERJ6GMYJ272	CHIP	1/16W 2.7K	1	
R2022		ERJ6GMYJ222	CHIP	1/16W 2.2K	1	
R2029		ERJ6GMYJ683	CHIP	1/16W 68K	1	
R2030		ERJ6GMYJ333	CHIP	1/16W 33K	1	
R2031		ERJ6GMYJ473	CHIP	1/16W 47K	1	
R2032		ERJ6GMYJ124	CHIP	1/16W 120K	1	
R2033		ERJ6GMYJ683	CHIP	1/16W 68K	1	
R2034		ERJ6GMYJ391	CHIP	1/16W 390	1	
R2036		ERJ6GMYJ124	CHIP	1/16W 120K	1	
R2037		ERDS2TJ330	CARBON	1/4W 33	1	
R2038		ERDS2TJ330	CARBON	1/4W 33	1	
R2039		ERDS2TJ330	CARBON	1/4W 33	1	
R2040		ERJ6GMYJ103	CHIP	1/16W 10K	1	
R2710		ERDS2TJ472	CARBON	1/4W 4.7K	1	
R2711		ERDS2TJ105	CARBON	1/4W 1000K	1	

Ref.No.		Part No.	Part Name & Description		Pcs	Remarks
R2712		ERDS2TJ102	CARBON	1/4W 1K	1	
R2713		ERDS2TJ102	CARBON	1/4W 1K	1	
R2714		ERDS2TJ222	CARBON	1/4W 2.2K	1	
R2715		ERDS2TJ222	CARBON	1/4W 2.2K	1	
R2716		ERDS2TJ223	CARBON	1/4W 22K	1	
R3001		ERDS2TJ471	CARBON	1/4W 470	1	
R3002		ERJ6GMYJ750	CHIP	1/16W 75	1	
R3003		ERJ6GMYJ471	CHIP	1/16W 470	1	
R3004		ERJ6GMYJ224	CHIP	1/16W 220K	1	
R3005		ERJ6GMYJ272	CHIP	1/16W 2.7K	1	
R3006		ERJ6GMYJ471	CHIP	1/16W 470	1	
R3007		ERJ6GMYJ223	CHIP	1/16W 22K	1	
R3008		ERJ6GMYJ102	CHIP	1/16W 1K	1	
R3009		ERJ6GMYJ102	CHIP	1/16W 1K	1	
R3010		ERJ6GMYJ221	CHIP	1/16W 220	1	
R3011		ERJ6GMYJ561	CHIP	1/16W 560	1	
R3013		ERJ6GMYJ750	CHIP	1/16W 75	1	
R3018		ERJ6GMYJ750	CHIP	1/16W 75	1	
R3019		ERJ6GMYJ123	CHIP	1/16W 12K	1	
R3022		ERJ6GMYJ103	CHIP	1/16W 10K	1	
R3023		ERJ6GMYJ750	CHIP	1/16W 75	1	
R3024		ERJ6GMYJ750	CHIP	1/16W 75	1	
R4001		ERJ6GMYJ100	CHIP	1/16W 10	1	
R4002		ERJ6GMYJ152	CHIP	1/16W 1.5K	1	
R4003		ERJ6GMYJ272	CHIP	1/16W 2.7K	1	
R4004		ERJ6GMYJ183	CHIP	1/16W 18K	1	
R4005		ERJ6GMYJ222	CHIP	1/16W 2.2K	1	
R4006		ERJ6GMYJ223	CHIP	1/16W 22K	1	
R4007		ERJ6GMYJ333	CHIP	1/16W 33K	1	
R4008		ERJ6GMYJ562	CHIP	1/16W 5.6K	1	
R4009		ERJ6GMYJ562	CHIP	1/16W 5.6K	1	
R4010		ERJ6GMYJ473	CHIP	1/16W 47K	1	
R4011		ERJ6GMYJ334	CHIP	1/16W 330K	1	
R4012		ERJ6GMYJ331	CHIP	1/16W 330	1	
R4013		ERJ6GMYJ822	CHIP	1/16W 8.2K	1	
R4014		ERJ6GMYJ272	CHIP	1/16W 2.7K	1	
R4015		ERJ6GMYJ105	CHIP	1/16W 1M	1	
R4016		ERJ6GMYJ562	CHIP	1/16W 5.6K	1	
R4017		ERDS2TJ223	CARBON	1/4W 22K	1	
R4018		ERDS2TJ821	CARBON	1/4W 820	1	
R4019		ERJ6GMYJ392	CHIP	1/16W 3.9K	1	
R4020		ERJ6GMYJ223	CHIP	1/16W 22K	1	
R4021		ERJ6GMYJ470	CHIP	1/16W 47	1	
R4022		ERJ6GMYJ123	CHIP	1/16W 12K	1	
R4023		ERJ6GMYJ153	CHIP	1/16W 15K	1	
R4024		ERJ6GMYJ561	CHIP	1/16W 560	1	
R4025		ERJ6GMYJ221	CHIP	1/16W 220	1	
R4026		ERJ6GMYJ101	CHIP	1/16W 100	1	
R4027		ERJ6GMYJ561	CHIP	1/16W 560	1	
R4028		ERJ6GMYJ103	CHIP	1/16W 10K	1	
R4029		ERJ6GMYJ223	CHIP	1/16W 22K	1	
R4030		ERJ6GMYJ122	CHIP	1/16W 1.2K	1	
R4031		ERJ6GMYJ472	CHIP	1/16W 4.7K	1	
R4032		ERJ6GMYJ563	CHIP	1/16W 56K	1	
R4033		ERJ6GMYJ563	CHIP	1/16W 56K	1	
R4034		ERJ6GMYJ273	CHIP	1/16W 27K	1	
R4035		ERJ6GMYJ561	CHIP	1/16W 560	1	
R4036		ERJ6GMYJ472	CHIP	1/16W 4.7K	1	
R6001		ERDS1TJ470	CARBON	1/2W 47	1	
R6006		ERD2FCVG220	CARBON	2W 22	1	
R6007		ERJ6GMYJ122	CHIP	1/16W 1.2K	1	
R6008		ERJ6GMYJ181	CHIP	1/16W 180	1	
R6009		ERJ6GMYJ561	CHIP	1/16W 560	1	
R6010		ERJ6GMYJ102	CHIP	1/16W 1K	1	
R6011		ERJ6GMYJ221	CHIP	1/16W 220	1	
R6016		ERJ6GMYJ223	CHIP	1/16W 22K	1	
R6019		ERJ6GMYJ153	CHIP	1/16W 15K	1	
R6022		ERJ6GMYJ223	CHIP	1/16W 22K	1	
R6023		ERJ6GMYJ683	CHIP	1/16W 68K	1	
R6024		ERJ6GMYJ223	CHIP	1/16W 22K	1	
R6025		ERJ6GMYJ824	CHIP	1/16W 820K	1	
R6026		ERJ6GMYJ105	CHIP	1/16W 1M	1	
R6027		ERJ6GMYJ223	CHIP	1/16W 22K	1	
R6028		ERJ6GMYJ184	CHIP	1/16W 180K	1	
R6029		ERJ6GMYJ561	CHIP	1/16W 560	1	

Ref.No.		Part No.	Part Name & Description			Pcs	Remarks
R6030		ERJ6GMYJ153	CHIP	1/16W	15K	1	
R6031		ERJ6GMYJ153	CHIP	1/16W	15K	1	
R6032		ERJ6GMYJ332	CHIP	1/16W	3.3K	1	
R6033		ERJ6GMYJ333	CHIP	1/16W	33K	1	
R6034		ERJ6GMYJ333	CHIP	1/16W	33K	1	
R6035		ERJ6GMYJ101	CHIP	1/16W	100	1	
R6036		ERJ6GMYJ101	CHIP	1/16W	100	1	
R6037		ERJ6GMYJ101	CHIP	1/16W	100	1	
R6038		ERJ6GMYJ272	CHIP	1/16W	2.7K	1	
R6041		ERJ6GMYJ391	CHIP	1/16W	390	1	
R6045		ERDS2TJ562	CARBON	1/4W	5.6K	1	
R6046		ERDS2TJ152	CARBON	1/4W	1.5K	1	
R6050		ERJ6GMYJ562	CHIP	1/16W	5.6K	1	
R6051		ERJ6GMYJ332	CHIP	1/16W	3.3K	1	
R6068		ERDS2TJ332	CARBON	1/4W	3.3K	1	
R6069		ERJ6GMYJ103	CHIP	1/16W	10K	1	
R6070		ERJ6GMYJ471	CHIP	1/16W	470	1	
R6071		ERJ6GMYJ152	CHIP	1/16W	1.5K	1	
R6072		ERJ6GMYJ562	CHIP	1/16W	5.6K	1	
R6073		ERJ6GMYJ391	CHIP	1/16W	390	1	
R6074		ERJ6GMYJ561	CHIP	1/16W	560	1	
R6075		ERG2SJ180	METAL OXIDE	2W	18	1	
R6079		ERJ6GMYJ103	CHIP	1/16W	10K	1	
R6080		ERJ6GMYJ272	CHIP	1/16W	2.7K	1	
R6081		ERJ6GMYJ103	CHIP	1/16W	10K	1	
R6083		ERJ6GMYJ104	CHIP	1/16W	100K	1	
R6085		ERJ6GMYJ101	CHIP	1/16W	100	1	
R6087		ERJ6GMYJ103	CHIP	1/16W	10K	1	
R6088		ERJ6GMYJ223	CHIP	1/16W	22K	1	
R6089		ERJ6GMYJ473	CHIP	1/16W	47K	1	
R6090		ERJ6GMYJ104	CHIP	1/16W	100K	1	
R6091		ERJ6GMYJ473	CHIP	1/16W	47K	1	
R6093		ERDS2TJ103	CARBON	1/4W	10K	1	
R6095		ERJ6GMYJ272	CHIP	1/16W	2.7K	1	
R6096		ERJ6GMYJ272	CHIP	1/16W	2.7K	1	
R6097		ERJ6GMYJ272	CHIP	1/16W	2.7K	1	
R7518		ERJ6GMYJ181	CHIP	1/16W	180	1	
R7551		ERJ6GMYJ104	CHIP	1/16W	100K	1	
R7552		ERJ6GMYJ332	CHIP	1/16W	3.3K	1	
R7553		ERJ6GMYJ332	CHIP	1/16W	3.3K	1	
R7554		ERJ6GMYJ102	CHIP	1/16W	1K	1	
R7555		ERJ6GMYJ102	CHIP	1/16W	1K	1	
R7556		ERJ6GMYJ473	CHIP	1/16W	47K	1	
R7557		ERJ6GMYJ124	CHIP	1/16W	120K	1	
R7558		ERJ6GMYJ104	CHIP	1/16W	100K	1	
R7559		ERJ6GMYJ473	CHIP	1/16W	47K	1	
R7560		ERJ6GMYJ473	CHIP	1/16W	47K	1	
R7561		ERJ6GMYJ223	CHIP	1/16W	22K	1	
R7562		ERJ6GMYJ332	CHIP	1/16W	3.3K	1	
R7564		ERJ6GMYJ332	CHIP	1/16W	3.3K	1	
R7565		ERJ6GMYJ102	CHIP	1/16W	1K	1	
R7568		ERJ6GMYJ103	CHIP	1/16W	10K	1	
R7572		ERJ6GMYJ473	CHIP	1/16W	47K	1	
R7573		ERJ6GMYJ820	CHIP	1/16W	82	1	
R7574		ERDS2TJ333	CARBON	1/4W	33K	1	
R7575		ERDS2TJ273	CARBON	1/4W	27K	1	
R7576		ERDS2TJ390	CARBON	1/4W	39	1	
R7578		ERDS2TJ103	CARBON	1/4W	10K	1	
R7579		ERDS2TJ103	CARBON	1/4W	10K	1	
R7586		ERJ6GMYJ222	CHIP	1/16W	2.2K	1	
R7587		ERJ6GMYJ102	CHIP	1/16W	1K	1	
R7600		ERJ6GMYJ332	CHIP	1/16W	3.3K	1	
R8001		ERJ6GMYJ102	CHIP	1/16W	1K	1	
R8002		ERJ6GMYJ181	CHIP	1/16W	180	1	
R8003		ERJ6GMYJ821	CHIP	1/16W	820	1	
R8101		ERDS2TJ391	CARBON	1/4W	390	1	
R8102		ERDS2TJ271	CARBON	1/4W	270	1	
R8103		ERDS2TJ122	CARBON	1/4W	1.2K	1	
R8104		ERDS2TJ273	CARBON	1/4W	27K	1	
R8105		ERDS2TJ103	CARBON	1/4W	10K	1	
R8106		ERDS2TJ272	CARBON	1/4W	2.7K	1	
R8107		ERDS2TJ561	CARBON	1/4W	560	1	
R8108		ERDS2TJ333	CARBON	1/4W	33K	1	
R8109		ERDS2TJ183	CARBON	1/4W	18K	1	
R8110		ERDS2TJ102	CARBON	1/4W	1K	1	

Ref.No.		Part No.	Part Name & Description			Pcs	Remarks
R8111		ERDS2TJ391	CARBON	1/4W	390	1	
R8112		ERDS2TJ681	CARBON	1/4W	680	1	
R8113		ERDS2TJ122	CARBON	1/4W	1.2K	1	
R8114		ERDS2TJ331	CARBON	1/4W	330	1	
R8115		ERDS2TJ102	CARBON	1/4W	1K	1	
R8116		ERDS2TJ391	CARBON	1/4W	390	1	
R8117		ERDS2TJ103	CARBON	1/4W	10K	1	
R8118		ERDS2TJ473	CARBON	1/4W	47K	1	
R8119		ERDS2TJ333	CARBON	1/4W	33K	1	
R8120		ERDS2TJ393	CARBON	1/4W	39K	1	
R8121		ERDS2TJ271	CARBON	1/4W	270	1	
R8122		ERDS2TJ472	CARBON	1/4W	4.7K	1	
R8123		ERDS2TJ222	CARBON	1/4W	2.2K	1	
R8124		ERDS2TJ273	CARBON	1/4W	27K	1	
R8125		ERDS2TJ123	CARBON	1/4W	12K	1	
R8126		ERDS2TJ102	CARBON	1/4W	1K	1	
R8127		ERDS2TJ471	CARBON	1/4W	470	1	
R8128		ERDS2TJ561	CARBON	1/4W	560	1	
R8129		ERDS2TJ682	CARBON	1/4W	6.8K	1	
R8130		ERDS2TJ392	CARBON	1/4W	3.9K	1	
R8131		ERDS2TJ391	CARBON	1/4W	390	1	
R8132		ERDS2TJ391	CARBON	1/4W	390	1	
R8133		ERDS2TJ391	CARBON	1/4W	390	1	
R8134		ERDS2TJ331	CARBON	1/4W	330	1	
R8135		ERDS2TJ564	CARBON	1/4W	560K	1	
R8136		ERDS2TJ333	CARBON	1/4W	33K	1	
R8137		ERDS2TJ123	CARBON	1/4W	12K	1	
R8138		ERDS2TJ122	CARBON	1/4W	1.2K	1	
R8139		ERDS2TJ391	CARBON	1/4W	390	1	
R8140		ERDS2TJ103	CARBON	1/4W	10K	1	
R8141		ERDS2TJ103	CARBON	1/4W	10K	1	
R8142		ERDS2TJ561	CARBON	1/4W	560	1	
R8143		ERDS2TJ102	CARBON	1/4W	1K	1	
R8146		ERDS2TJ562	CARBON	1/4W	5.6K	1	
R8147		ERDS2TJ103	CARBON	1/4W	10K	1	
R8148		ERDS2TJ103	CARBON	1/4W	10K	1	
R8149		ERDS2TJ332	CARBON	1/4W	3.3K	1	
R8150		ERDS2TJ472	CARBON	1/4W	4.7K	1	
R8151		ERDS2TJ333	CARBON	1/4W	33K	1	
R8152		ERDS2TJ333	CARBON	1/4W	33K	1	
R8156		ERDS2TJ562	CARBON	1/4W	5.6K	1	
R8157		ERDS2TJ561	CARBON	1/4W	560	1	
R8158		ERDS2TJ272	CARBON	1/4W	2.7K	1	
R8201		ERDS2TJ331	CARBON	1/4W	330	1	
R8202		ERDS2TJ221	CARBON	1/4W	220	1	
R8203		ERDS2TJ682	CARBON	1/4W	6.8K	1	
R8204		ERDS2TJ272	CARBON	1/4W	2.7K	1	
R8205		ERDS2TJ222	CARBON	1/4W	2.2K	1	
R8206		ERDS2TJ102	CARBON	1/4W	1K	1	
R8207		ERDS2TJ101	CARBON	1/4W	100	1	
R8208		ERDS2TJ154	CARBON	1/4W	150K	1	
R8209		ERDS2TJ333	CARBON	1/4W	33K	1	
R8210		ERDS2TJ333	CARBON	1/4W	33K	1	
R8211		ERDS2TJ152	CARBON	1/4W	1.5K	1	
R8212		ERDS2TJ222	CARBON	1/4W	2.2K	1	
R8214		ERDS2TJ223	CARBON	1/4W	22K	1	
R8215		ERDS2TJ154	CARBON	1/4W	150K	1	
R8216		ERDS2TJ390	CARBON	1/4W	39	1	
R8217		ERDS2TJ222	CARBON	1/4W	2.2K	1	
R8218		ERDS2TJ103	CARBON	1/4W	10K	1	
R8219		ERDS2TJ272	CARBON	1/4W	2.7K	1	
R8220		ERDS2TJ223	CARBON	1/4W	22K	1	
R8221		ERDS2TJ101	CARBON	1/4W	100	1	
R8222		ERDS2TJ103	CARBON	1/4W	10K	1	
R8223		ERDS2TJ103	CARBON	1/4W	10K	1	
R8224		ERDS2TJ222	CARBON	1/4W	2.2K	1	
			TRANSFORMERS				
T703		EIV5EC015A	TRANSFORMER			1	
T704		EIV5EC014A	TRANSFORMER			1	
T711		EIS5EC003A	TRANSFORMER			1	
T4001		EIQ7QF001B	IF TRANSFORMER			1	
T8201		ELM7Q207A	COIL			1	

Ref.No.		Part No.	Part Name & Description	Pcs	Remarks
			VARIABLE RESISTORS		
VR301		EVN60AA00B52	VARIABLE 500	1	
VR701		EVNE4AA00B23	VARIABLE 2K	1	
VR702		EVNE4AA00B23	VARIABLE 2K	1	
VR741		EVN38CA00B14	VARIABLE 10K	1	
VR751		EVN38CA00B53	VARIABLE 5K	1	
VR2001		EVND3AA00B54	VARIABLE 50K	1	
VR2002		EVND3AA00B54	VARIABLE 50K	1	
VR2006		EVND3AA00B54	VARIABLE 50K	1	
VR2009		EVL51MA00B25	VARIABLE 200K	1	
VR2010		EVL51MA00B25	VARIABLE 200K	1	
VR2011		EVND3AA00B15	VARIABLE 100K	1	
VR2013		EVN38CA00B23	VARIABLE 2K	1	
VR4001		EVND3AA00B14	VARIABLE 10K	1	
VR4002		EVND3AA00B25	VARIABLE 200K	1	
VR7502		EVND3AA00B14	VARIABLE 10K	1	
VR8101		EVN3ACA00B52	VARIABLE 500	1	
VR8102		EVN3ACA00B53	VARIABLE 5K	1	
VR8103		EVN3ACA00B52	VARIABLE 500	1	
VR8201		EVM38GA00B24	VARIABLE 20K	1	
			CRYSTAL OSCILLATOR		
X201		VSX0060	CRYSTAL OSCILLATOR	1	
X801		VSX0190	CRYSTAL OSCILLATOR		
X6001		EF0FC3584A5	CRYSTAL OSCILLATOR		
X7504		EFBAA40D101	CRYSTAL OSCILLATOR		
			FILTERS		
X710		EFCH45MSP1	FILTER	1	
X711		EFCS4R5MW5	FILTER	1	
X712		EFCS4R5MS5	FILTER	1	
			MISCELLENEOUS		
	■	VJF0215	BIND		
	■	VEJ0565	INPUT/OUTPUT JACK BOARD		
	■	VJF0004	WIRE SADDLE		
	■	VJF0330	PURSE LOCK		
	■	VKC0280	HINGE CLIP		
	■	VMC0075	HEAT SINK		FOR IC2001
	■	VSC1068	HEAT SINK		FOR Q6016
	■	VSC1689	IC HEAT SINK		FOR IC2001
	■	VWJ0261	FLAT CABLE (8P)		P6004-P7501
	■	VWJ05DW200MM	FLAT CABLE (5P)		P1503-P6002
	■	VSC1789	SHILDE CASE		MAIN FOR DEMODULATOR
	■	VSC1788	SHILDE CASE		TOP FOR DEMODULATOR
	■	VEP03407A	MAIN C.B.A.		NV-G21PX<!>
			(SYSTEM COMTROL,SERVO,		
			LUMINANCE & CHROMINANCE,		
			AUDIO,TV DEMODULATOR)		
			CAPACITORS		
C101		ECUX1H680JCN	CHIP 50V 68P	1	
C102		ECUX1H030CCN	CHIP 50V 3P	1	
C103		ECUX1H560JCN	CHIP 50V 56P	1	
C104		ECUX1H470JCN	CHIP 50V 47P	1	
C105		ECUX1H560JCN	CHIP 50V 56P	1	
C106		ECUX1H470JCN	CHIP 50V 47P	1	
C107		ECUX1H390JCN	CHIP 50V 39P	1	
C108		ECUX1H330JCN	CHIP 50V 33P	1	
C202		ECEA1HKR47	ELECTROLYTIC 50V 0.47U	1	
C203		ECUX1H562KBN	CHIP 50V 5600P	1	
C204		ECEA1CKN100	ELECTROLYTIC 16V 10U	1	
C205		ECQV1H473JZ	MYLAR 50V 0.047U	1	
C206		ECEA1CK100	ELECTROLYTIC 16V 10U	1	

Ref.No.		Part No.	Part Name & Description	Pcs	Remarks
C207		ECEA1CK100	ELECTROLYTIC 16V 10U	1	
C208		ECEA1HKN010	ELECTROLYTIC 50V 1U	1	
C209		ECEA1HKN010	ELECTROLYTIC 50V 1U	1	
C210		ECEA0JK220	ELECTROLYTIC 6.3V 22U	1	
C211		ECEA0JK220	ELECTROLYTIC 6.3V 22U	1	
C212		ECQV1H104JZ	MYLAR 50V 0.1U	1	
C213		ECQV1H683JZ	MYLAR 50V 0.068U	1	
C214		ECUX1H102KBN	CHIP 50V 1000P	1	
C215		ECEA1HKNR47	ELECTROLYTIC 50V 0.47U	1	
C216		ECQV1H473JZ	MYLAR 50V 0.047U	1	
C217		ECEA1HKR47	ELECTROLYTIC 50V 0.47U	1	
C218		ECUX1H472KBN	CHIP 50V 4700P	1	
C219		ECQV1H274JZ	MYLAR 50V 0.27U	1	
C220		ECUX1H103ZFN	CHIP 50V 0.01U	1	
C221		ECQV1H104JZ	MYLAR 50V 0.1U	1	
C222		ECQB1H103JH	MYLAR 50V 0.01U	1	
C223		ECUX1H562KBN	CHIP 50V 5600P	1	
C224		ECEA0JK470	ELECTROLYTIC 6.3V 47U	1	
C225		ECEA0JK470	ELECTROLYTIC 6.3V 47U	1	
C226		ECUX1H102KBN	CHIP 50V 1000P	1	
C227		ECUX1H332KBN	CHIP 50V 3300P	1	
C229		ECWM1H472JZ	CHIP 50V 4700P	1	
C230		ECEA1CKN100	ELECTROLYTIC 16V 10U	1	
C231		ECEA1HK010	ELECTROLYTIC 50V 1U	1	
C232		ECEA1CK100	ELECTROLYTIC 16V 10U	1	
C234		ECUX1H102KBN	CHIP 50V 1000P	1	
C236		ECQB1H223KH	MYLAR 50V 0.022U	1	
C237		ECQB1H562JH	MYLAR 50V 5600P	1	
C238		ECEA0JK101	ELECTROLYTIC 6.3V 100U	1	
C239		ECEA0JK221	ELECTROLYTIC 6.3V 220U	1	
C240		ECEA1CK100	ELECTROLYTIC 16V 10U	1	
C241		ECEA0JK470	ELECTROLYTIC 6.3V 47U	1	
C242		ECUX1H103ZFN	CHIP 50V 0.01U	1	
C243		ECUX1H103ZFN	CHIP 50V 0.01U	1	
C244		ECEA1EK4R7	ELECTROLYTIC 25V 4.7U	1	
C245		ECUX1H562KBN	CHIP 50V 5600P	1	
C246		ECQV1H104JZ	MYLAR 50V 0.1U	1	
C247		ECEA1CK100	ELECTROLYTIC 16V 10U	1	
C248		ECUX1H102KBN	CHIP 50V 1000P	1	
C249		ECCF1H101JC	CERAMIC 50V 100P	1	
C250		ECCF1H151JC	CERAMIC 50V 150P	1	
C251		ECCF1H180JC	CERAMIC 50V 18P	1	
C252		ECEA0JK470	ELECTROLYTIC 6.3V 47U	1	
C253		ECKF1H103ZF	CERAMIC 50V 0.01U	1	
C254		VCYD1C473MR1	SEMICONDUCTOR 16V 0.047U	1	
C271		ECEA1CK100	ELECTROLYTIC 16V 10U	1	
C272		ECEA1EK3R3	ELECTROLYTIC 25V 3.3U	1	
C273		ECKF1H182KB	CERAMIC 50V 1800P	1	
C301		ECEA0JK220	ELECTROLYTIC 6.3V 22U	1	
C302		ECEA0JU221	ELECTROLYTIC 6.3V 220U	1	
C303		ECUX1H221KN	CHIP 50V 220P	1	
C304		ECEA1EK3R3	ELECTROLYTIC 25V 3.3U	1	
C305		ECUX1H121JCN	CHIP 50V 120P	1	
C306		ECEA0JK101	ELECTROLYTIC 6.3V 100U	1	
C307		ECUX1H103ZFN	CHIP 50V 0.01U	1	
C308		ECEA1CK100	ELECTROLYTIC 16V 10U	1	
C309		ECEA1CK100	ELECTROLYTIC 16V 10U	1	
C310		ECEA0JK220	ELECTROLYTIC 6.3V 22U	1	
C311		ECUX1H820JCN	CHIP 50V 82P	1	
C313		ECUX1H121JCN	CHIP 50V 120P	1	
C314		ECUX1H220JCN	CHIP 50V 22P	1	
C315		ECEA1CK101	ELECTROLYTIC 16V 100U	1	
C317		ECUX1H151JCN	CHIP 50V 150P	1	
C319		ECUX1H151JCN	CHIP 50V 150P	1	
C320		ECUX1H330JCN	CHIP 50V 33P	1	
C321		ECUX1H101JCN	CHIP 50V 100P	1	
C322		ECEA0JU221	ELECTROLYTIC 6.3V 220U	1	
C323		ECEA1EK3R3	ELECTROLYTIC 25V 3.3U	1	
C324		ECUX1H103ZFN	CHIP 50V 0.01U	1	
C326		ECUX1H470JCN	CHIP 50V 47P	1	
C327		ECEA1EK3R3	ELECTROLYTIC 25V 3.3U	1	
C328		ECEA1EK3R3	ELECTROLYTIC 25V 3.3U	1	
C329		ECEA1EKN3R3	ELECTROLYTIC 25V 3.3U	1	
C330		ECEA1HK2R2	ELECTROLYTIC 50V 2.2U	1	
C331		ECEA1HK010	ELECTROLYTIC 50V 1U	1	

Ref.No.		Part No.	Part Name & Description			Pcs	Remarks
C332		ECEA1HKR47	ELECTROLYTIC	50V	0.47U	1	
C701		ECEA1CKS220	ELECTROLYTIC	16V	22U	1	
C702		ECEA1CKS100	ELECTROLYTIC	16V	10U	1	
C703		ECEA1HK2R2	ELECTROLYTIC	50V	2.2U	1	
C705		ECEA1CKS100	ELECTROLYTIC	16V	10U	1	
C706		ECQV1H823JZ	MYLAR	50V	0.082U	1	
C707		ECEA1HK0R1	ELECTROLYTIC	50V	0.1U	1	
C708		ECEA1CKS220	ELECTROLYTIC	16V	22U	1	
C709		ECEA1CKS220	ELECTROLYTIC	16V	22U	1	
C710		ECUX1H103ZFN	CHIP	50V	0.01U	1	
C715		ECUX1H103ZFN	CHIP	50V	0.01U	1	
C716		ECUX1H103ZFN	CHIP	50V	0.01U	1	
C717		ECUX1H103ZFN	CHIP	50V	0.01U	1	
C718		ECUX1H103ZFN	CHIP	50V	0.01U	1	
C719		ECUX1H103ZFN	CHIP	50V	0.01U	1	
C720		ECUX1H103ZFN	CHIP	50V	0.01U	1	
C721		ECEA1HKR27	ELECTROLYTIC	50V	0.27U	1	
C722		ECUX1H103ZFN	CHIP	50V	0.01U	1	
C723		ECUX1H220JCN	CHIP	50V	22P	1	
C725		ECQV1H104JZ	MYLAR	50V	0.1U	1	
C728		ECUX1H103ZFN	CHIP	50V	0.01U	1	
C730		ECEA1CKS100	ELECTROLYTIC	16V	10U	1	
C731		ECEA1CK100	ELECTROLYTIC	16V	10U	1	
C732		ECQV1H224JZ	MYLAR	50V	0.22U	1	
C734		ECUX1H103ZFN	CHIP	50V	0.01U	1	
C735		ECUX1H080DCN	CHIP	50V	8P	1	
C736		ECQB1H103JH	MYLAR	50V	0.01U	1	
C737		ECUX1H331JCN	CHIP	50V	330P	1	
C739		ECEA1HK010	ELECTROLYTIC	50V	1U	1	
C740		ECUX1H103ZFN	CHIP	50V	0.01U	1	
C741		ECEA1CK100	ELECTROLYTIC	16V	10U	1	
C743		ECUX1H270JSN	CHIP	50V	27P	1	
C744		ECEA1HKR47	ELECTROLYTIC	50V	0.47U	1	
C745		ECUX1H470JPN	CHIP	50V	47P	1	
C746		ECUX1H100DCN	CHIP	50V	10P	1	
C747		ECUX1H103ZFN	CHIP	50V	0.01U	1	
C748		ECEA1CK330	ELECTROLYTIC	16V	33U	1	
C749		ECEA1CK100	ELECTROLYTIC	16V	10U	1	
C760		ECQV1H823JZ	MYLAR	50V	0.082U	1	
C781		ECUX1H470JCN	CHIP	50V	47P	1	
C782		ECCF1H060DC	CERAMIC	50V	6P	1	
C801		ECUX1H220JCN	CHIP	50V	22P	1	
C802		ECEA1EK3R3	ELECTROLYTIC	25V	3.3U	1	
C803		ECEA1HK010	ELECTROLYTIC	50V	1U	1	
C804		ECUX1H222KBN	CHIP	50V	2200P	1	
C805		ECEA1HK010	ELECTROLYTIC	50V	1U	1	
C806		ECEA0JK220	ELECTROLYTIC	6.3V	22U	1	
C807		ECUX1H080DCN	CHIP	50V	8P	1	
C808		ECUX1H102KBN	CHIP	50V	1000P	1	
C809		ECEA0JK470	ELECTROLYTIC	6.3V	47U	1	
C810		ECUX1H103ZFN	CHIP	50V	0.01U	1	
C811		ECUX1H271JN	CHIP	50V	270P	1	
C812		ECEA1OZ330	ELECTROLYTIC	10V	33U	1	
C813		ECUX1H271JN	CHIP	50V	270P	1	
C814		ECUX1H471KBN	CHIP	50V	470P	1	
C815		ECUX1H390JCN	CHIP	50V	39P	1	
C2001		ECQB1H333JH	MYLAR	50V	0.033U	1	
C2002		ECQB1H333JH	MYLAR	50V	0.033U	1	
C2003		ECQB1H333JH	MYLAR	50V	0.033U	1	
C2004		ECEA1HK2R2	ELECTROLYTIC	50V	2.2U	1	
C2005		ECEA1HK2R2	ELECTROLYTIC	50V	2.2U	1	
C2006		ECEA1HK2R2	ELECTROLYTIC	50V	2.2U	1	
C2007		ECQB1H223JH	MYLAR	50V	0.022U	1	
C2008		ECQV1H104JZ	MYLAR	50V	0.1U	1	
C2009		ECEA1HK010	ELECTROLYTIC	50V	1U	1	
C2011		ECEA1CK101	ELECTROLYTIC	16V	100U	1	
C2018		ECQV1H104JZ	MYLAR	50V	0.1U	1	
C2019		ECEA1CK470	ELECTROLYTIC	16V	47U	1	
C2021		VCYD1C104MR1	SEMICONDUCTOR	16V	0.1U	1	
C2022		ECUX1H332KBN	CHIP	50V	3300P	1	
C2023		ECUX1H332KBN	CHIP	50V	3300P	1	
C2024		ECUX1H332KBN	CHIP	50V	3300P	1	
C2025		ECEA1EU221	ELECTROLYTIC	25V	220U	1	
C2027		ECQV1H474JZ	MYLAR	50V	0.47U	1	
C2701		ECEA0JK470	ELECTROLYTIC	6.3V	47U	1	

Ref.No.		Part No.	Part Name & Description			Pcs	Remarks
C2702		ECQV1H224JZ	MYLAR	50V	0.22U	1	
C3001		ECEA1CK470	ELECTROLYTIC	16V	47U	1	
C3002		ECEA0JU471	ELECTROLYTIC	6.3V	470U	1	
C3003		ECEA1CK100	ELECTROLYTIC	16V	10U	1	
C3004		ECUX1H820JCN	CHIP	50V	82P	1	
C3005		ECUX1H391JN	CHIP	50V	390P	1	
C3006		ECUX1H180JCN	CHIP	50V	18P	1	
C3007		ECEA0JK470	ELECTROLYTIC	6.3V	47U	1	
C3008		ECEA1HK010	ELECTROLYTIC	50V	1U	1	
C3012		ECUX1H180JCN	CHIP	50V	18P	1	
C4001		ECQB1H392JH	MYLAR	50V	3900P	1	
C4002		ECUX1H102KBN	CHIP	50V	1000P	1	
C4003		ECEA1CK330	ELECTROLYTIC	16V	33U	1	
C4004		ECEA1HK010	ELECTROLYTIC	50V	1U	1	
C4005		ECEA1AK220	ELECTROLYTIC	10V	22U	1	
C4006		ECEA1CK100	ELECTROLYTIC	16V	10U	1	
C4007		ECEA50MX1	ELECTROLYTIC	35V	1U	1	
C4008		ECUX1H331KBN	CHIP	50V	330P	1	
C4009		ECUX1H102KBN	CHIP	50V	1000P	1	
C4010		ECQB1H103JH	MYLAR	50V	0.01U	1	
C4011		ECEA16M10	ELECTROLYTIC	16V	10U	1	
C4012		ECEA1HK010	ELECTROLYTIC	50V	1U	1	
C4013		ECEA1AK220	ELECTROLYTIC	10V	22U	1	
C4014		ECEA1CK470	ELECTROLYTIC	16V	47U	1	
C4015		ECEA1CK100	ELECTROLYTIC	16V	10U	1	
C4016		ECEA1CK100	ELECTROLYTIC	16V	10U	1	
C4017		ECQB1H223JH	MYLAR	50V	0.022U	1	
C4018		ECQB1H333JH	MYLAR	50V	0.033U	1	
C4019		ECQB1H273KH	MYLAR	50V	0.027U	1	
C4020		ECEA1CK100	ELECTROLYTIC	16V	10U	1	
C4021		ECUX1H102KBN	CHIP	50V	1000P	1	
C4022		ECQB1H153KH	MYLAR	50V	0.015U	1	
C4023		ECEA1CK470	ELECTROLYTIC	16V	47U	1	
C4024		ECQP1222JZ	MYLAR	100V	2200P	1	
C4025		ECEA1CK470	ELECTROLYTIC	16V	47U	1	
C4026		ECQV1H563JZ	MYLAR	50V	0.056U	1	
C4027		ECQV1H184JZ	MYLAR	50V	0.18U	1	
C6001		ECEA0JK220	ELECTROLYTIC	6.3V	22U	1	
C6007		ECQV1H104JZ	MYLAR	50V	0.1U	1	
C6011		ECUX1E103KBN	CHIP	25V	0.01U	1	
C6012		ECUX1E103KBN	CHIP	25V	0.01U	1	
C6014		ECUX1H221KN	CHIP	50V	220P	1	
C6017		ECEA0JK470	ELECTROLYTIC	6.3V	47U	1	
C6018		ECEA0JK470	ELECTROLYTIC	6.3V	47U	1	
C6019		ECEA0JK470	ELECTROLYTIC	6.3V	47U	1	
C6020		ECUX1E103KBN	CHIP	25V	0.01U	1	
C6022		ECEA0JK330	ELECTROLYTIC	6.3V	33U	1	
C6023		ECKF1H103ZF	CERAMIC	50V	0.01U	1	
C6024		ECEA1CK330	ELECTROLYTIC	16V	33U	1	
C6025		ECUX1H102KBN	CHIP	50V	1000P	1	
C6026		ECEA0JU101	ELECTROLYTIC	6.3V	100U	1	
C6030		ECUX1H271JN	CHIP	50V	270P	1	
C6031		ECUX1H271JN	CHIP	50V	270P	1	
C6032		ECUX1H271JN	CHIP	50V	270P	1	
C7518		EECF5R5U105	GOLD	5.5V	1.0F	1	
C7551		ECQV1H104JZ	MYLAR	50V	0.1U	1	
C7552		ECEA1HK010	ELECTROLYTIC	50V	1U	1	
C7553		ECEA1CK100	ELECTROLYTIC	16V	10U	1	
C7554		ECEA1VK220	ELECTROLYTIC	35V	22U	1	
C7555		ECQB1H273KH	MYLAR	50V	0.027U	1	
C7556		ECQV1H823JZ	MYLAR	50V	0.082U	1	
C7557		ECQV1H683JZ	MYLAR	50V	0.068U	1	
C7558		ECUX1H103ZFN	CHIP	50V	0.01U	1	
C7559		ECQV1H104JZ	MYLAR	50V	0.1U	1	
C7560		ECUX1H103ZFN	CHIP	50V	0.01U	1	
C7561		ECQV1H104JZ	MYLAR	50V	0.1U	1	
C7563		ECEA1HK010	ELECTROLYTIC	50V	1U	1	
C7564		ECEA1CK220	ELECTROLYTIC	16V	22U	1	
C7565		ECUX1H103ZFN	CHIP	50V	0.01U	1	
C7566		ECUX1H103ZFN	CHIP	50V	0.01U	1	
C7567		ECEA1HK010	ELECTROLYTIC	50V	1U	1	
C7568		ECUX1H103ZFN	CHIP	50V	0.01U	1	
C7570		ECEA1CK100	ELECTROLYTIC	16V	10U	1	
C7652		ECEA1CKN330	ELECTROLYTIC	16V	33U	1	
C7653		ECQB1H392JH	MYLAR	50V	3900P	1	

Ref.No.		Part No.	Part Name & Description	Pcs	Remarks
C7654		ECQB1H103JH	MYLAR 50V 0.01U	1	
C7655		ECEA1HK010	ELECTROLYTIC 50V 1U	1	
C7656		ECEA1HK010	ELECTROLYTIC 50V 1U	1	
C7657		ECUX1H103ZFN	CHIP 50V 0.01U	1	
C7658		ECQP1H562JZ	MYLAR 50V 5600P	1	
C7659		ECQB1H272JH	MYLAR 50V 2700P	1	
C8001		ECUX1H103ZFN	CHIP 50V 0.01U	1	
C8002		ECUX1H103ZFN	CHIP 50V 0.01U	1	
			DIODES		
D201		MA165	DIODE	1	
D202		MA165	DIODE	1	
D302		MA221	DIODE	1	
D303		1SS283	DIODE	1	
D304		1SS283	DIODE	1	
D305		1SS283	DIODE	1	
D306		MA221	DIODE	1	
D307		1SS283	DIODE	1	
D308		MA221	DIODE	1	
D309		MA221	DIODE	1	
D710		MA3100L	DIODE	1	
D712		MA27WA	DIODE	1	
D2001		MA165	DIODE	1	
D2002		MA165	DIODE	1	
D2003		MA165	DIODE	1	
D2004		MA165	DIODE	1	
D2007		MA165	DIODE	1	
D2008		MA165	DIODE	1	
D2009		MA165	DIODE	1	
D3001		MA165	DIODE	1	
D3002		MA165	DIODE	1	
D3003		MA165	DIODE	1	
D3004		11ES1	DIODE	1	
D6001		11ES1	DIODE	1	
D6002		MA165	DIODE	1	
D6005		MA165	DIODE	1	
D6009		MA165	DIODE	1	
D6010		MA165	DIODE	1	
D6011		MA165	DIODE	1	
D6012		MA165	DIODE	1	
D6017		11ES1	DIODE	1	
D6019		MA4150M	DIODE	1	(L)
D6020		MA4110M	DIODE	1	(L)
D6021		MA165	DIODE	1	
D6022		MA165	DIODE	1	
D6023		MA165	DIODE	1	
D6024		MA165	DIODE	1	
D6028		MA165	DIODE	1	
D6029		MA165	DIODE	1	
D6030		MA165	DIODE	1	
D6031		MA165	DIODE	1	
D7551		MA165	DIODE	1	
D7552		ERA15-01	DIODE	1	
D7553		MA165	DIODE	1	
D7554		LN28WP.VT	LED	1	
D7555		MA27WA	DIODE	1	
D7558		MA165	DIODE	1	
D7559		MA165	DIODE	1	
D7560		MA165	DIODE	1	
			DELAY LINES		
DL301		VLD0077	DELAY LINE	1	
DL801		VLD0072	DELAY LINE	1	
			FILTERS		
FL301		ELB4L021	FILTER	1	
FL801		VLF0330	FILTER	1	
FL802		ELB4K017	FILTER	1	
FL4001		VLF0332	FILTER	1	
			ICS		

Ref.No.		Part No.	Part Name & Description	Pcs	Remarks
IC201		UPD6160CA509	IC	1	
IC202		MN15311VJH	IC	1	
IC203		UPC358C	IC	1	
IC301		VEFY013	FIC	1	LUMINANCE
IC701		M51366SP	IC	1	
IC801		VEFC012	FIC	1	CHROMINANCE
IC2001		BA6430S	IC	1	
IC2702		UPC358C	IC	1	
IC4001		BA7752LS	IC	1	
IC6001		MN15362VJR	IC	1	
IC6002		UPC393C	IC	1	
IC6003		UPD4510BC	IC	1	
IC6004		MN1280	IC	1	
IC7551		AN5034	IC	1	
IC7552		AN6913	IC	1	
IC7553		UPD4066BC	IC	1	
IC7651		AN5421	IC	1	
			COILS		
L101		VLQ0275	COIL	1	
L102		VLP0031	COIL	1	
L103		VLP0032	COIL	1	
L105		VLQ0276	COIL	1	
L106		VLQ0276	COIL	1	
L107		VLQ0276	COIL	1	
L108		VLQ0277	COIL	1	
L109		VLQ0152	COIL	1	
L202		VLQEL05F101K	COIL 100UH	1	
L301		VLQEL05F101K	COIL 100UH	1	
L302		VLQEL05F101K	COIL 100UH	1	
L303		VLQEL05F100K	COIL 10UH	1	
L304		VLQEL05F100K	COIL 10UH	1	
L306		VLQEL05F181K	COIL 180UH	1	
L308		VLQEL05F181K	COIL 180UH	1	
L309		VLQEL05F101K	COIL 100UH	1	
L310		VLQEL05F101K	COIL 100UH	1	
L311		VLQEL05F101K	COIL 100UH	1	
L312		VLQEL05F101K	COIL 100UH	1	
L701		VLQEL05F680K	COIL 68UH	1	
L702		VLQEL05F680K	COIL 68UH	1	
L711		ELQTR56XB	COIL	1	
L712		ELQTR47XB	COIL	1	
L713		ELQTR56XB	COIL	1	
L714		ELQF1R2KB	COIL 1.2U	1	
L715		VLQ0167	COIL	1	
L717		VLQEL05F680K	COIL 68UH	1	
L718		VLQEL05F680K	COIL 68UH	1	
L719		VLQEL05F150K	COIL 15UH	1	
L781		VLQEL05F680K	COIL 68UH	1	
L801		VLQEL05F470J	COIL 47UH	1	
L802		VLQEL05F220K	COIL 22UH	1	
L803		VLQEL05F221K	COIL 220UH	1	
L804		VLQEL05F331K	COIL 330UH	1	
L805		VLQEL05F101K	COIL 100UH	1	
L806		VLQEL05F101K	COIL 100UH	1	
L807		VLQEL05F470K	COIL 47UH	1	
L2001		VLQEL05F102K	COIL 1000UH	1	
L3001		VLQEL05F101K	COIL 100UH	1	
L3002		VLQEL05F101K	COIL 100UH	1	
L3003		VLQEL05F181K	COIL 180UH	1	
L3004		VLQEL05F150K	COIL 15UH	1	
L3005		VLQEL05F220K	COIL 22UH	1	
L3006		VLQEL05F1R0K	COIL	1	
L4001		VLQEL07F682J	COIL 6800UH	1	
L4002		VLQEL05F101K	COIL 100UH	1	
L7551		VLQEL05F102K	COIL 1000UH	1	
L7552		VLQEL05F101K	COIL 100UH	1	
			CONNECTORS		
P501		VJS1235T	CONNECTOR	1	
P502		VJS1233T	CONNECTOR (FEMALE)	1	

Ref.No.		Part No.	Part Name & Description	Pcs	Remarks
P2001		VJP1232T	CONNECTOR(MALE) 5P	1	
P2001		VJS1738	CONNECTOR	1	
P2002		VJP1932T	CONNECTOR (MALE)	1	
P3001		VJP1235T	CONNECTOR(MALE) 8P	1	
P3001		VJS1235T	CONNECTOR (FEMALE)	1	
P3002		VJP1232T	CONNECTOR(MALE) 5P	1	
P3002		VJS1232T	CONNECTOR (FEMALE)	1	
P4001		VJP1233R	CONNECTOR(MALE) 6P	1	
P6001		VJP1239T	CONNECTOR(MALE) 12P	1	
P6002		VJS1935	CONNECTOR (FEMALE)	1	
P6003		VJP1236T	CONNECTOR(MALE) 9P	1	
P6003		VJS1742T	CONNECTOR	1	
P6004		VJS1656	CONNECTOR	1	
P6201		VJS1742T	CONNECTOR	1	
P7507		VJS1230T	CONNECTOR (FEMALE)	1	
P7551		VJP1230T	CONNECTOR(MALE) 3P	1	
P7554		VJS1230T	CONNECTOR (FEMALE)	1	
			PACK PINS		
PK201		VJR0190	PACK PIN	1	
PK202		VJR0189	PACK PIN	1	
PK203		VJR0190	PACK PIN	1	
PK271		VJR0188	PACK PIN	1	
PK301		VJR0130	PACK PIN	1	
PK302		VJR0160	PACK PIN	1	
PK303		VJR0163	PACK PIN	1	
			TRANSISTORS		
Q201		2SC3311	TRANSISTOR	1	
Q202		2SC3311	TRANSISTOR	1	
Q203		2SA1309	TRANSISTOR	1	
Q204		2SA1309	TRANSISTOR	1	
Q205		2SA1309	TRANSISTOR	1	
Q206		2SA1309	TRANSISTOR	1	
Q207		2SC2206	TRANSISTOR	1	(B,C)
Q208		2SC3311	TRANSISTOR	1	
Q271		2SC3311	TRANSISTOR	1	
Q272		2SC3311	TRANSISTOR	1	
Q273		2SC3311	TRANSISTOR	1	
Q274		2SC3311	TRANSISTOR	1	
Q302		2SC2295	TRANSISTOR	1	(B,C)
Q303		2SC2295	TRANSISTOR	1	(B,C)
Q304		2SC3311	TRANSISTOR	1	
Q305		2SB709	TRANSISTOR CHIP	1	(Q,R,S)
Q306		2SB709	TRANSISTOR CHIP	1	(Q,R,S)
Q307		2SD601	TRANSISTOR CHIP	1	(Q,R,S)
Q309		2SD601	TRANSISTOR CHIP	1	(Q,R,S)
Q310		2SD601	TRANSISTOR CHIP	1	(Q,R,S)
Q703		2SD601	TRANSISTOR CHIP	1	(S)
Q710		2SC2377	TRANSISTOR	1	(C)
Q712		2SD638	TRANSISTOR	1	(Q,R,S)
Q713		2SD1328	TRANSISTOR CHIP	1	(S,T)
Q714		2SD601	TRANSISTOR CHIP	1	(Q,R,S)
Q801		2SB709	TRANSISTOR CHIP	1	(Q,R,S)
Q2001		2SA1309	TRANSISTOR	1	
Q2002		2SC3311	TRANSISTOR	1	
Q3001		2SA1309	TRANSISTOR	1	
Q3002		2SA1309	TRANSISTOR	1	
Q3003		2SC3314	TRANSISTOR	1	(B,C)
Q4001		2SC3311	TRANSISTOR	1	(R)
Q4002		2SD1449	TRANSISTOR	1	
Q4003		2SD1449	TRANSISTOR	1	
Q4004		2SB1036	TRANSISTOR	1	
Q4005		2SC3311	TRANSISTOR	1	
Q4006		2SC3311	TRANSISTOR	1	
Q6006		2SB1030	TRANSISTOR	1	
Q6007		2SA1512	TRANSISTOR	1	
Q6009		2SA1512	TRANSISTOR	1	
Q6016		2SD1275	TRANSISTOR	1	(P,Q,R)
Q6017		2SD893	TRANSISTOR	1	(Q,R,S)
Q6018		2SD592	TRANSISTOR	1	(Q,R,S)
Q6019		2SD1423	TRANSISTOR	1	
Q7551		2SB1030A	TRANSISTOR	1	

Ref.No.		Part No.	Part Name & Description	Pcs	Remarks
Q7552		2SB1030A	TRANSISTOR	1	
Q7651		2SD601	TRANSISTOR CHIP	1	(S)
Q8001		2SC3311	TRANSISTOR	1	
			COMBINATION PARTS		
QR201		UN4113	TRANSISTOR-RESISTOR	1	
QR202		UN4113	TRANSISTOR-RESISTOR	1	
QR203		UN4212	TRANSISTOR-RESISTOR	1	
QR301		UN2213	TRANSISTOR-RESISTOR	1	
QR304		DTC114YK	TRANSISTOR-RESISTOR	1	
QR306		UN2213	TRANSISTOR-RESISTOR	1	
QR307		UN2213	TRANSISTOR-RESISTOR	1	
QR701		UN2213	TRANSISTOR-RESISTOR	1	
QR702		UN2213	TRANSISTOR-RESISTOR	1	
QR711		UN2212	TRANSISTOR-RESISTOR	1	
QR712		UN2212	TRANSISTOR-RESISTOR	1	
QR713		UN2211	TRANSISTOR-RESISTOR	1	
QR2003		UN4112	TRANSISTOR-RESISTOR	1	
QR2004		UN4113	TRANSISTOR-RESISTOR	1	
QR2005		UN4213	TRANSISTOR-RESISTOR	1	
QR2006		UN4213	TRANSISTOR-RESISTOR	1	
QR2020		UN4212	TRANSISTOR-RESISTOR	1	
QR2025		UN4112	TRANSISTOR-RESISTOR	1	
QR2026		UN4213	TRANSISTOR-RESISTOR	1	
QR2027		UN4213	TRANSISTOR-RESISTOR	1	
QR2028		UN4213	TRANSISTOR-RESISTOR	1	
QR3001		UN4111	TRANSISTOR-RESISTOR	1	
QR3004		UN4213	TRANSISTOR-RESISTOR	1	
QR6001		UN4212	TRANSISTOR-RESISTOR	1	
QR6004		UN4213	TRANSISTOR-RESISTOR	1	
QR6005		UN4213	TRANSISTOR-RESISTOR	1	
QR6006		UN4111	TRANSISTOR-RESISTOR	1	
QR6008		UN4111	TRANSISTOR-RESISTOR	1	
QR6011		UN4212	TRANSISTOR-RESISTOR	1	
QR6012		UN4113	TRANSISTOR-RESISTOR	1	
QR6013		UN4213	TRANSISTOR-RESISTOR	1	
QR6014		UN4213	TRANSISTOR-RESISTOR	1	
QR6016		UN4213	TRANSISTOR-RESISTOR	1	
QR7556		UN4213	TRANSISTOR-RESISTOR	1	
QR7557		UN4213	TRANSISTOR-RESISTOR	1	
QR7558		UN4213	TRANSISTOR-RESISTOR	1	
QR7559		UN4213	TRANSISTOR-RESISTOR	1	
			RESISTORS		
R101		ERJ6GMYJ181	CHIP 1/16W 180	1	
R102		ERJ6GMYJ332	CHIP 1/16W 3.3K	1	
R103		ERJ6GMYJ332	CHIP 1/16W 3.3K	1	
R104		ERJ6GMYJ332	CHIP 1/16W 3.3K	1	
R105		ERJ6GMYJ332	CHIP 1/16W 3.3K	1	
R201		ERJ6GMYJ393	CHIP 1/16W 39K	1	
R202		ERJ6GMYJ152	CHIP 1/16W 1.5K	1	
R203		ERJ6GMYJ103	CHIP 1/16W 10K	1	
R204		ERJ6GMYJ221	CHIP 1/16W 220	1	
R205		ERJ6GMYJ102	CHIP 1/16W 1K	1	
R206		ERJ6GMYJ392	CHIP 1/16W 3.9K	1	
R207		ERJ6GMYJ473	CHIP 1/16W 47K	1	
R208		ERJ6GMYJ222	CHIP 1/16W 2.2K	1	
R209		ERJ6GMYJ123	CHIP 1/16W 12K	1	
R210		ERJ6GMYJ274	CHIP 1/16W 270K	1	
R211		ERJ6GMYJ563	CHIP 1/16W 56K	1	
R212		ERJ6GMYJ154	CHIP 1/16W 150K	1	
R213		ERJ6GMYJ154	CHIP 1/16W 150K	1	
R214		ERJ6GMYJ224	CHIP 1/16W 220K	1	
R215		ERJ6GMYJ472	CHIP 1/16W 4.7K	1	
R216		ERJ6GMYJ103	CHIP 1/16W 10K	1	
R217		ERJ6GMYJ683	CHIP 1/16W 68K	1	
R218		ERJ6GMYJ333	CHIP 1/16W 33K	1	
R219		ERJ6GMYJ333	CHIP 1/16W 33K	1	
R220		ERJ6GMYJ823	CHIP 1/16W 82K	1	
R221		ERJ6GMYJ823	CHIP 1/16W 82K	1	
R222		ERJ6GMYJ332	CHIP 1/16W 3.3K	1	
R223		ERJ6GMYJ332	CHIP 1/16W 3.3K	1	
R224		ERJ6GMYJ561	CHIP 1/16W 560	1	

Ref.No.	Part No.	Part Name & Description	Pcs	Remarks
R225	ERJ6GMYJ222	CHIP 1/16W 2.2K	1	
R226	ERJ6GMYJ102	CHIP 1/16W 1K	1	
R227	ERJ6GMYJ103	CHIP 1/16W 10K	1	
R228	ERJ6GMYJ393	CHIP 1/16W 39K	1	
R229	ERJ6GMYJ221	CHIP 1/16W 220	1	
R230	ERJ6GMYJ152	CHIP 1/16W 1.5K	1	
R231	ERJ6GMYJ152	CHIP 1/16W 1.5K	1	
R232	ERJ6GMYJ563	CHIP 1/16W 56K	1	
R233	ERJ6GMYJ563	CHIP 1/16W 56K	1	
R234	ERJ6GMYJ472	CHIP 1/16W 4.7K	1	
R235	ERJ6GMYJ333	CHIP 1/16W 33K	1	
R236	ERJ6GMYJ154	CHIP 1/16W 150K	1	
R237	ERJ6GMYJ154	CHIP 1/16W 150K	1	
R238	ERJ6GMYJ124	CHIP 1/16W 120K	1	
R239	ERJ6GMYJ222	CHIP 1/16W 2.2K	1	
R240	ERJ6GMYG333	CHIP 1/16W 33K	1	
R241	ERJ6GMYJ684	CHIP 1/16W 680K	1	
R242	ERJ6GMYJ154	CHIP 1/16W 150K	1	
R243	ERJ6GMYJ103	CHIP 1/16W 10K	1	
R244	ERJ6GMYJ223	CHIP 1/16W 22K	1	
R245	ERJ6GMYJ223	CHIP 1/16W 22K	1	
R246	ERJ6GMYJ103	CHIP 1/16W 10K	1	
R247	ERJ6GMYJ392	CHIP 1/16W 3.9K	1	
R248	ERJ6GMYJ223	CHIP 1/16W 22K	1	
R249	ERJ6GMYG472	CHIP 1/16W 4.7K	1	
R250	ERJ6GMYJ821	CHIP 1/16W 820	1	
R251	ERJ6GMYJ824	CHIP 1/16W 820K	1	
R252	ERJ6GMYJ473	CHIP 1/16W 47K	1	
R253	ERDS2TJ564	CARBON 1/4W 560K	1	
R256	ERJ6GMYJ123	CHIP 1/16W 12K	1	
R257	ERJ6GMYJ562	CHIP 1/16W 5.6K	1	
R258	ERJ6GMYJ683	CHIP 1/16W 68K	1	
R259	ERJ6GMYJ223	CHIP 1/16W 22K	1	
R260	ERJ6GMYJ223	CHIP 1/16W 22K	1	
R262	ERDS2TJ272	CARBON 1/4W 2.7K	1	
R263	ERDS2TJ750	CARBON 1/4W 75	1	
R264	ERDS2TJ183	CARBON 1/4W 18K	1	
R265	ERDS2TJ103	CARBON 1/4W 10K	1	
R266	ERJ6GMYJ563	CHIP 1/16W 56K	1	
R267	ERJ6GMYJ563	CHIP 1/16W 56K	1	
R268	ERJ6GMYJ562	CHIP 1/16W 5.6K	1	
R269	ERJ6GMYJ272	CHIP 1/16W 2.7K	1	
R271	ERDS2TJ222	CARBON 1/4W 2.2K	1	
R272	ERDS2TJ154	CARBON 1/4W 150K	1	
R273	ERDS2TJ153	CARBON 1/4W 15K	1	
R274	ERDS2TJ154	CARBON 1/4W 150K	1	
R275	ERDS2TJ102	CARBON 1/4W 1K	1	
R276	ERDS2TJ273	CARBON 1/4W 27K	1	
R277	ERDS2TJ681	CARBON 1/4W 680	1	
R278	ERDS2TJ104	CARBON 1/4W 100K	1	
R279	ERDS2TJ683	CARBON 1/4W 68K	1	
R301	ERJ6GMYJ393	CHIP 1/16W 39K	1	
R302	ERJ6GMYJ681	CHIP 1/16W 680	1	
R304	ERJ6GMYJ223	CHIP 1/16W 22K	1	
R305	ERJ6GMYJ223	CHIP 1/16W 22K	1	
R306	ERJ6GMYJ473	CHIP 1/16W 47K	1	
R307	ERJ6GMYJ153	CHIP 1/16W 15K	1	
R308	ERJ6GMYJ473	CHIP 1/16W 47K	1	
R309	ERJ6GMYJ473	CHIP 1/16W 47K	1	
R310	ERDS2TJ272	CARBON 1/4W 2.7K	1	
R311	ERJ6GMYJ821	CHIP 1/16W 820	1	
R312	ERDS2TJ472	CARBON 1/4W 4.7K	1	
R313	ERJ6GMYJ682	CHIP 1/16W 6.8K	1	
R314	ERJ6GMYJ182	CHIP 1/16W 1.8K	1	
R315	ERJ6GMYJ102	CHIP 1/16W 1K	1	
R316	EROS2CKG2702	METAL OXIDE 1/4W 27K	1	
R317	ERJ6GMYG822	CHIP 1/16W 8.2K	1	
R318	ERDS2TJ272	CARBON 1/4W 2.7K	1	
R319	ERJ6GMYJ681	CHIP 1/16W 680	1	
R320	ERJ6GMYJ102	CHIP 1/16W 1K	1	
R321	ERJ6GMYJ182	CHIP 1/16W 1.8K	1	
R322	ERJ6GMYJ680	CHIP 1/16W 68	1	
R323	ERJ6GMYJ823	CHIP 1/16W 82K	1	
R324	ERJ6GMYJ102	CHIP 1/16W 1K	1	
R325	ERJ6GMYJ221	CHIP 1/16W 220	1	

Ref.No.	Part No.	Part Name & Description	Pcs	Remarks
R326	ERJ6GMYJ223	CHIP 1/16W 22K	1	
R327	ERJ6GMYJ272	CHIP 1/16W 2.7K	1	
R329	ERJ6GMYJ153	CHIP 1/16W 15K	1	
R330	ERJ6GMYJ182	CHIP 1/16W 1.8K	1	
R333	ERJ6GMYJ223	CHIP 1/16W 22K	1	
R334	ERJ6GMYJ223	CHIP 1/16W 22K	1	
R336	ERJ6GMYJ274	CHIP 1/16W 270K	1	
R337	ERJ6GMYJ684	CHIP 1/16W 680K	1	
R338	ERJ6GMYJ103	CHIP 1/16W 10K	1	
R340	ERJ6GMYJ223	CHIP 1/16W 22K	1	
R341	ERJ6GMYJ273	CHIP 1/16W 27K	1	
R707	ERJ6GMYJ103	CHIP 1/16W 10K	1	
R712	ERJ6GMYJ682	CHIP 1/16W 6.8K	1	
R713	ERJ6GMYJ681	CHIP 1/16W 680	1	
R714	ERD2FCG330	CARBON 2W 33	1	
R715	ERJ6GMYJ271	CHIP 1/16W 270	1	
R716	ERJ6GMYJ272	CHIP 1/16W 2.7K	1	
R717	ERJ6GMYJ332	CHIP 1/16W 3.3K	1	
R718	ERJ6GMYJ754	CHIP 1/16W 750K	1	
R719	ERJ6GMYJ682	CHIP 1/16W 6.8K	1	
R720	ERJ6GMYJ822	CHIP 1/16W 8.2K	1	
R721	ERJ6GMYJ272	CHIP 1/16W 2.7K	1	
R722	ERJ6GMYJ332	CHIP 1/16W 3.3K	1	
R723	ERJ6GMYJ183	CHIP 1/16W 18K	1	
R724	ERJ6GMYJ101	CHIP 1/16W 100	1	
R725	ERJ6GMYJ182	CHIP 1/16W 1.8K	1	
R726	ERDS2TJ472	CARBON 1/4W 4.7K	1	
R727	ERJ6GMYJ471	CHIP 1/16W 470	1	
R728	ERDS2TJ471	CARBON 1/4W 470	1	
R729	ERJ6GMYJ331	CHIP 1/16W 330	1	
R730	ERJ6GMYJ331	CHIP 1/16W 330	1	
R737	ERJ6GMYJ394	CHIP 1/16W 390K	1	
R738	ERJ6GMYJ274	CHIP 1/16W 270K	1	
R739	ERDS2TJ681	CARBON 1/4W 680	1	
R740	ERJ6GMYJ473	CHIP 1/16W 47K	1	
R741	ERJ6GMYJ272	CHIP 1/16W 2.7K	1	
R742	ERJ6GMYJ272	CHIP 1/16W 2.7K	1	
R743	ERDS2TJ470	CARBON 1/4W 47	1	
R744	ERJ6GMYJ821	CHIP 1/16W 820	1	
R745	ERJ6GMYJ331	CHIP 1/16W 330	1	
R746	ERDS2TJ151	CARBON 1/4W 150	1	
R750	ERJ6GMYJ182	CHIP 1/16W 1.8K	1	
R757	ERJ6GMYJ222	CHIP 1/16W 2.2K	1	
R759	ERDS2TJ103	CARBON 1/4W 10K	1	
R760	ERJ6GMYJ102	CHIP 1/16W 1K	1	
R763	ERJ6GMYJ103	CHIP 1/16W 10K	1	
R764	ERJ6GMYJ822	CHIP 1/16W 8.2K	1	
R781	ERJ6GMYJ271	CHIP 1/16W 270	1	
R782	ERJ6GMYJ391	CHIP 1/16W 390	1	
R792	ERJ6GMYJ120	CHIP 1/16W 12	1	
R801	ERJ6GMYJ122	CHIP 1/16W 1.2K	1	
R802	ERJ6GMYJ271	CHIP 1/16W 270	1	
R803	ERJ6GMYJ273	CHIP 1/16W 27K	1	
R804	ERJ6GMYJ821	CHIP 1/16W 820	1	
R805	ERJ8GCYJ470	CHIP 1/16W 47	1	
R806	ERJ6GMYJ102	CHIP 1/16W 1K	1	
R807	ERJ6GMYJ122	CHIP 1/16W 1.2K	1	
R808	ERJ6GMYJ182	CHIP 1/16W 1.8K	1	
R809	ERJ6GMYJ222	CHIP 1/16W 2.2K	1	
R810	ERJ6GMYJ102	CHIP 1/16W 1K	1	
R811	ERJ6GMYJ471	CHIP 1/16W 470	1	
R812	ERJ6GMYJ473	CHIP 1/16W 47K	1	
R813	ERJ6GMYJ473	CHIP 1/16W 47K	1	
R814	ERJ6GMYJ102	CHIP 1/16W 1K	1	
R2004	ERX12SJ1R0	METAL OXIDE 1/2W 1	1	
R2005	ERJ6GMYJ102	CHIP 1/16W 1K	1	
R2006	ERJ6GMYG562	CHIP 1/16W 5.6K	1	
R2007	ERJ6GMYJ472	CHIP 1/16W 4.7K	1	
R2008	ERJ6GMYJ682	CHIP 1/16W 6.8K	1	
R2009	ERJ6GMYJ562	CHIP 1/16W 5.6K	1	
R2010	ERJ6GMYJ223	CHIP 1/16W 22K	1	
R2011	ERJ6GMYJ223	CHIP 1/16W 22K	1	
R2012	ERJ6GMYJ103	CHIP 1/16W 10K	1	
R2013	ERJ6GMYJ473	CHIP 1/16W 47K	1	
R2014	ERJ6GMYJ222	CHIP 1/16W 2.2K	1	

Ref.No.		Part No.	Part Name & Description			Pcs	Remarks
R2015		ERJ6GMYJ102	CHIP	1/16W	1K	1	
R2016		ERJ6GMYJ103	CHIP	1/16W	10K	1	
R2017		ERDS2TJ332	CARBON	1/4W	3.3K	1	
R2018		ERDS2TJ330	CARBON	1/4W	33	1	
R2019		ERJ6GMYJ102	CHIP	1/16W	1K	1	
R2020		ERJ6GMYJ104	CHIP	1/16W	100K	1	
R2021		ERJ6GMYJ272	CHIP	1/16W	2.7K	1	
R2022		ERJ6GMYJ222	CHIP	1/16W	2.2K	1	
R2029		ERJ6GMYJ683	CHIP	1/16W	68K	1	
R2030		ERJ6GMYJ333	CHIP	1/16W	33K	1	
R2031		ERJ6GMYJ473	CHIP	1/16W	47K	1	
R2032		ERJ6GMYJ124	CHIP	1/16W	120K	1	
R2033		ERJ6GMYJ683	CHIP	1/16W	68K	1	
R2034		ERJ6GMYJ391	CHIP	1/16W	390	1	
R2036		ERJ6GMYJ124	CHIP	1/16W	120K	1	
R2037		ERDS2TJ330	CARBON	1/4W	33	1	
R2038		ERDS2TJ330	CARBON	1/4W	33	1	
R2039		ERDS2TJ330	CARBON	1/4W	33	1	
R2040		ERJ6GMYJ103	CHIP	1/16W	10K	1	
R2710		ERDS2TJ472	CARBON	1/4W	4.7K	1	
R2711		ERDS2TJ105	CARBON	1/4W	1000K	1	
R2712		ERDS2TJ102	CARBON	1/4W	1K	1	
R2713		ERDS2TJ102	CARBON	1/4W	1K	1	
R2714		ERDS2TJ222	CARBON	1/4W	2.2K	1	
R2715		ERDS2TJ222	CARBON	1/4W	2.2K	1	
R2716		ERDS2TJ223	CARBON	1/4W	22K	1	
R3001		ERDS2TJ471	CARBON	1/4W	470	1	
R3002		ERJ6GMYJ750	CHIP	1/16W	75	1	
R3003		ERJ6GMYJ471	CHIP	1/16W	470	1	
R3004		ERJ6GMYJ224	CHIP	1/16W	220K	1	
R3005		ERJ6GMYJ272	CHIP	1/16W	2.7K	1	
R3006		ERJ6GMYJ471	CHIP	1/16W	470	1	
R3007		ERJ6GMYJ223	CHIP	1/16W	22K	1	
R3008		ERJ6GMYJ102	CHIP	1/16W	1K	1	
R3009		ERJ6GMYJ102	CHIP	1/16W	1K	1	
R3010		ERJ6GMYJ221	CHIP	1/16W	220	1	
R3011		ERJ6GMYJ561	CHIP	1/16W	560	1	
R3013		ERJ6GMYJ750	CHIP	1/16W	75	1	
R3018		ERJ6GMYJ750	CHIP	1/16W	75	1	
R3019		ERJ6GMYJ123	CHIP	1/16W	12K	1	
R3022		ERJ6GMYJ103	CHIP	1/16W	10K	1	
R3023		ERJ6GMYJ750	CHIP	1/16W	75	1	
R3024		ERJ6GMYJ750	CHIP	1/16W	75	1	
R4001		ERJ6GMYJ100	CHIP	1/16W	10	1	
R4002		ERJ6GMYJ152	CHIP	1/16W	1.5K	1	
R4003		ERJ6GMYJ272	CHIP	1/16W	2.7K	1	
R4004		ERJ6GMYJ183	CHIP	1/16W	18K	1	
R4005		ERJ6GMYJ222	CHIP	1/16W	2.2K	1	
R4006		ERJ6GMYJ223	CHIP	1/16W	22K	1	
R4007		ERJ6GMYJ333	CHIP	1/16W	33K	1	
R4008		ERJ6GMYJ562	CHIP	1/16W	5.6K	1	
R4009		ERJ6GMYJ562	CHIP	1/16W	5.6K	1	
R4010		ERJ6GMYJ473	CHIP	1/16W	47K	1	
R4011		ERJ6GMYJ334	CHIP	1/16W	330K	1	
R4012		ERJ6GMYJ331	CHIP	1/16W	330	1	
R4013		ERJ6GMYJ822	CHIP	1/16W	8.2K	1	
R4014		ERJ6GMYJ272	CHIP	1/16W	2.7K	1	
R4015		ERJ6GMYJ105	CHIP	1/16W	1M	1	
R4016		ERJ6GMYJ562	CHIP	1/16W	5.6K	1	
R4017		ERDS2TJ223	CARBON	1/4W	22K	1	
R4018		ERDS2TJ821	CARBON	1/4W	820	1	
R4019		ERJ6GMYJ392	CHIP	1/16W	3.9K	1	
R4020		ERJ6GMYJ223	CHIP	1/16W	22K	1	
R4021		ERJ6GMYJ470	CHIP	1/16W	47	1	
R4022		ERJ6GMYJ123	CHIP	1/16W	12K	1	
R4023		ERJ6GMYJ153	CHIP	1/16W	15K	1	
R4024		ERJ6GMYJ561	CHIP	1/16W	560	1	
R4025		ERJ6GMYJ221	CHIP	1/16W	220	1	
R4026		ERJ6GMYJ101	CHIP	1/16W	100	1	
R4027		ERJ6GMYJ561	CHIP	1/16W	560	1	
R4028		ERJ6GMYJ103	CHIP	1/16W	10K	1	
R4029		ERJ6GMYJ223	CHIP	1/16W	22K	1	
R4030		ERJ6GMYJ122	CHIP	1/16W	1.2K	1	
R4031		ERJ6GMYJ472	CHIP	1/16W	4.7K	1	
R4032		ERJ6GMYJ563	CHIP	1/16W	56K	1	

Ref.No.		Part No.	Part Name & Description			Pcs	Remarks
R4033		ERJ6GMYJ563	CHIP	1/16W	56K	1	
R4034		ERJ6GMYJ273	CHIP	1/16W	27K	1	
R4035		ERJ6GMYJ561	CHIP	1/16W	560	1	
R4036		ERJ6GMYJ472	CHIP	1/16W	4.7K	1	
R6001		ERDS1TJ470	CARBON	1/2W	47	1	
R6006		ERD2FCVG220	CARBON	2W	22	1	
R6007		ERJ6GMYJ122	CHIP	1/16W	1.2K	1	
R6008		ERJ6GMYJ181	CHIP	1/16W	180	1	
R6009		ERJ6GMYJ561	CHIP	1/16W	560	1	
R6010		ERJ6GMYJ102	CHIP	1/16W	1K	1	
R6011		ERJ6GMYJ221	CHIP	1/16W	220	1	
R6016		ERJ6GMYJ223	CHIP	1/16W	22K	1	
R6019		ERJ6GMYJ153	CHIP	1/16W	15K	1	
R6022		ERJ6GMYJ223	CHIP	1/16W	22K	1	
R6023		ERJ6GMYJ683	CHIP	1/16W	68K	1	
R6024		ERJ6GMYJ223	CHIP	1/16W	22K	1	
R6025		ERJ6GMYJ824	CHIP	1/16W	820K	1	
R6026		ERJ6GMYJ105	CHIP	1/16W	1M	1	
R6027		ERJ6GMYJ223	CHIP	1/16W	22K	1	
R6028		ERJ6GMYJ184	CHIP	1/16W	180K	1	
R6029		ERJ6GMYJ561	CHIP	1/16W	560	1	
R6030		ERJ6GMYJ153	CHIP	1/16W	15K	1	
R6031		ERJ6GMYJ153	CHIP	1/16W	15K	1	
R6032		ERJ6GMYJ332	CHIP	1/16W	3.3K	1	
R6033		ERJ6GMYJ333	CHIP	1/16W	33K	1	
R6034		ERJ6GMYJ333	CHIP	1/16W	33K	1	
R6035		ERJ6GMYJ101	CHIP	1/16W	100	1	
R6036		ERJ6GMYJ101	CHIP	1/16W	100	1	
R6037		ERJ6GMYJ101	CHIP	1/16W	100	1	
R6038		ERJ6GMYJ272	CHIP	1/16W	2.7K	1	
R6041		ERJ6GMYJ391	CHIP	1/16W	390	1	
R6045		ERDS2TJ562	CARBON	1/4W	5.6K	1	
R6046		ERDS2TJ152	CARBON	1/4W	1.5K	1	
R6050		ERJ6GMYJ562	CHIP	1/16W	5.6K	1	
R6051		ERJ6GMYJ332	CHIP	1/16W	3.3K	1	
R6068		ERDS2TJ332	CARBON	1/4W	3.3K	1	
R6069		ERJ6GMYJ103	CHIP	1/16W	10K	1	
R6070		ERJ6GMYJ471	CHIP	1/16W	470	1	
R6071		ERJ6GMYJ152	CHIP	1/16W	1.5K	1	
R6072		ERJ6GMYJ562	CHIP	1/16W	5.6K	1	
R6073		ERJ6GMYJ391	CHIP	1/16W	390	1	
R6074		ERJ6GMYJ561	CHIP	1/16W	560	1	
R6075		ERG2SJ180	METAL OXIDE	2W	18	1	
R6079		ERJ6GMYJ103	CHIP	1/16W	10K	1	
R6080		ERJ6GMYJ272	CHIP	1/16W	2.7K	1	
R6081		ERJ6GMYJ103	CHIP	1/16W	10K	1	
R6083		ERJ6GMYJ104	CHIP	1/16W	100K	1	
R6085		ERJ6GMYJ101	CHIP	1/16W	100	1	
R6087		ERJ6GMYJ103	CHIP	1/16W	10K	1	
R6088		ERJ6GMYJ223	CHIP	1/16W	22K	1	
R6089		ERJ6GMYJ473	CHIP	1/16W	47K	1	
R6090		ERJ6GMYJ104	CHIP	1/16W	100K	1	
R6091		ERJ6GMYJ473	CHIP	1/16W	47K	1	
R6093		ERDS2TJ103	CARBON	1/4W	10K	1	
R6095		ERJ6GMYJ272	CHIP	1/16W	2.7K	1	
R6096		ERJ6GMYJ272	CHIP	1/16W	2.7K	1	
R6097		ERJ6GMYJ272	CHIP	1/16W	2.7K	1	
R7518		ERJ6GMYJ181	CHIP	1/16W	180	1	
R7551		ERJ6GMYJ104	CHIP	1/16W	100K	1	
R7552		ERJ6GMYJ332	CHIP	1/16W	3.3K	1	
R7553		ERJ6GMYJ332	CHIP	1/16W	3.3K	1	
R7554		ERJ6GMYJ102	CHIP	1/16W	1K	1	
R7555		ERJ6GMYJ102	CHIP	1/16W	1K	1	
R7556		ERJ6GMYJ473	CHIP	1/16W	47K	1	
R7557		ERJ6GMYJ124	CHIP	1/16W	120K	1	
R7558		ERJ6GMYJ104	CHIP	1/16W	100K	1	
R7559		ERJ6GMYJ473	CHIP	1/16W	47K	1	
R7560		ERJ6GMYJ473	CHIP	1/16W	47K	1	
R7561		ERJ6GMYJ223	CHIP	1/16W	22K	1	
R7562		ERJ6GMYJ332	CHIP	1/16W	3.3K	1	
R7564		ERJ6GMYJ332	CHIP	1/16W	3.3K	1	
R7565		ERJ6GMYJ102	CHIP	1/16W	1K	1	
R7568		ERJ6GMYJ103	CHIP	1/16W	10K	1	
R7572		ERJ6GMYJ473	CHIP	1/16W	47K	1	
R7573		ERJ6GMYJ820	CHIP	1/16W	82	1	

Ref.No.		Part No.	Part Name & Description	Pcs	Remarks
R7574		ERDS2TJ333	CARBON 1/4W 33K	1	
R7575		ERDS2TJ273	CARBON 1/4W 27K	1	
R7576		ERDS2TJ390	CARBON 1/4W 39	1	
R7577		ERDS2TJ563	CARBON 1/4W 56K	1	
R7580		ERJ6GMYJ123	CHIP 1/16W 12K	1	
R7581		ERJ6GMYJ562	CHIP 1/16W 5.6K	1	
R7582		ERJ6GMYJ682	CHIP 1/16W 6.8K	1	
R7583		ERDS2TJ473	CARBON 1/4W 47K	1	
R7584		ERJ6GMYJ333	CHIP 1/16W 33K	1	
R7585		ERDS2TJ473	CARBON 1/4W 47K	1	
R7586		ERJ6GMYJ222	CHIP 1/16W 2.2K	1	
R7587		ERJ6GMYJ102	CHIP 1/16W 1K	1	
R7589		ERJ6GMYJ332	CHIP 1/16W 3.3K	1	
R7590		ERJ6GMYJ332	CHIP 1/16W 3.3K	1	
R7651		ERJ6GMYJ103	CHIP 1/16W 10K	1	
R7653		ERJ6GMYJ471	CHIP 1/16W 470	1	
R7654		ERJ6GMYJ562	CHIP 1/16W 5.6K	1	
R7655		ERJ6GMYJ472	CHIP 1/16W 4.7K	1	
R7656		ERJ6GMYJ151	CHIP 1/16W 150	1	
R7657		ERJ6GMYJ104	CHIP 1/16W 100K	1	
R7658		ERJ6GMYJ393	CHIP 1/16W 39K	1	
R7659		ERJ6GMYJ822	CHIP 1/16W 8.2K	1	
R7661		ERJ6GMYJ562	CHIP 1/16W 5.6K	1	
R7662		ERJ6GMYJ393	CHIP 1/16W 39K	1	
R7663		ERJ6GMYJ222	CHIP 1/16W 2.2K	1	
R7664		ERJ6GMYJ332	CHIP 1/16W 3.3K	1	
R8001		ERJ6GMYJ102	CHIP 1/16W 1K	1	
R8002		ERJ6GMYJ181	CHIP 1/16W 180	1	
R8003		ERJ6GMYJ821	CHIP 1/16W 820	1	
			SWITCH		
SW1		ESD14535	SWITCH	1	
			TRANSFORMERS		
T703		EIV5EC015A	TRANSFORMER	1	
T704		EIV5EC014A	TRANSFORMER	1	
T711		EIS5EC003A	TRANSFORMER	1	
T4001		EIQ7QF001B	IF TRANSFORMER	1	
			VARIABLE RESISTORS		
VR301		EVN60AA00B52	VARIABLE 500	1	
VR701		EVNE4AA00B23	VARIABLE 2K	1	
VR702		EVNE4AA00B23	VARIABLE 2K	1	
VR741		EVN38CA00B14	VARIABLE 10K	1	
VR751		EVN38CA00B53	VARIABLE 5K	1	
VR2001		EVND3AA00B54	VARIABLE 50K	1	
VR2002		EVND3AA00B54	VARIABLE 50K	1	
VR2006		EVND3AA00B54	VARIABLE 50K	1	
VR2009		EVL51MA00B25	VARIABLE 200K	1	
VR2010		EVL51MA00B25	VARIABLE 200K	1	
VR2011		EVND3AA00B15	VARIABLE 100K	1	
VR2013		EVN38CA00B23	VARIABLE 2K	1	
VR4001		EVND3AA00B14	VARIABLE 10K	1	
VR4002		EVND3AA00B25	VARIABLE 200K	1	
VR7502		EVND3AA00B14	VARIABLE 10K	1	
VR7660		EVNE4AA00B23	VARIABLE 2K	1	
			FILTER		
X710		EFCH45MSP1	FILTER	1	
X711		EFCS4R5MW5A	FILTER	1	
X712		EFCS4R5MS5	FILTER	1	
			CRYSTAL OSCILLATORS		
X201		VSX0060	CRYSTAL OSCILLATOR	1	
X801		VSX0160	CRYSTAL OSCILLATOR	1	
X6001		EF0FC3584A5	CRYSTAL OSCILLATOR	1	
			MISCELLENEOUS		
		VJF0215	BIND	1	

Ref.No.		Part No.	Part Name & Description	Pcs	Remarks
		VEJ0565	INPUT/OUTPUT JACK BOARD	1	
		VJF0004	WIRE SADLE	1	
		VJF0330	PURSE LOCK	1	
		VKC0280	HINGE CLIP	2	
		VMC0075	HEAT SINK	1	FOR IC2001
		VSC1068	HEAT SINK	1	FOR Q6016
		VSC1689	IC HEAT SINK	1	FOR IC2001
		VWJ0261	FLAT CABLE (8P)	1	P6004-P7501
		VWJ05DW200MM	FLAT CABLE (5P)	1	P1503-P6002
		VSC1789	SHILDE CASE	1	MAIN FOR DEMODULATOR
		VSC1788	SHILDE CASE	1	TOP FOR DEMODULATOR
	■	VEP05097A	HEAD AMP PACK C.B.A.		
			CAPACITORS		
C501		ECUX1H103ZFN	CHIP 50V 0.01U	1	
C502		ECUX1H560JCN	CHIP 50V 56P	1	
C503		ECUX1H331KBN	CHIP 50V 330P	1	
C504		ECUX1H560JCN	CHIP 50V 56P	1	
C505		ECUX1H103ZFN	CHIP 50V 0.01U	1	
C506		ECUX1E473ZFN	CHIP 25V 0.047U	1	
C507		ECEA1CK100	ELECTROLYTIC 16V 10U	1	
C508		ECUX1H151JCN	CHIP 50V 150P	1	
C509		ECUX1H103ZFN	CHIP 50V 0.01U	1	
C510		ECUX1H103ZFN	CHIP 50V 0.01U	1	
C511		ECUX1H103ZFN	CHIP 50V 0.01U	1	
C512		ECUX1H390JCN	CHIP 50V 39P	1	
C513		ECEA0JK220	ELECTROLYTIC 6.3V 22U	1	
C514		VCYD1C104MR1	SEMICONDUCTOR 16V 0.1U	1	
C515		ECUX1H102KBN	CHIP 50V 1000P	1	
C516		ECUX1H560JCN	CHIP 50V 56P	1	
C517		ECUX1H103ZFN	CHIP 50V 0.01U	1	
C518		ECEA1CK100	ELECTROLYTIC 16V 10U	1	
C519		ECEA1CK100	ELECTROLYTIC 16V 10U	1	
C520		ECUX1H220JCN	CHIP 50V 22P	1	
C521		ECUX1H103ZFN	CHIP 50V 0.01U	1	
C522		ECUX1H103ZFN	CHIP 50V 0.01U	1	
C523		ECUX1H220JCN	CHIP 50V 22P	1	
C524		ECEA1CK100	ELECTROLYTIC 16V 10U	1	
C525		ECUX1H102KBN	CHIP 50V 1000P	1	
C526		ECUX1H103ZFN	CHIP 50V 0.01U	1	
C527		ECUX1H102KBN	CHIP 50V 1000P	1	
C528		ECUX1H103ZFN	CHIP 50V 0.01U	1	
C529		ECUX1H103ZFN	CHIP 50V 0.01U	1	
C530		ECUX1E473ZFN	CHIP 25V 0.047U	1	
C531		ECEA0JK470	ELECTROLYTIC 6.3V 47U	1	
C532		ECUX1H220JCN	CHIP 50V 22P	1	
C533		ECUX1H470JCN	CHIP 50V 47P	1	
C534		ECEA1HK010	ELECTROLYTIC 50V 1U	1	
C535		ECUX1H331KBN	CHIP 50V 330P	1	
C536		VCYD1C104MR1	SEMICONDUCTOR 16V 0.1U	1	
C537		ECUX1H560JCN	CHIP 50V 56P	1	
C538		ECEA1CK100	ELECTROLYTIC 16V 10U	1	
C539		ECUX1H103ZFN	CHIP 50V 0.01U	1	
			ICS		
IC501		AN3224K	IC	1	
IC502		AN3311S	IC	1	
			COILS		
L501		VLQEL05F101K	COIL 100UH	1	
L502		VLQEL05F121K	COIL 120UH	1	
L503		VLQEL05F181K	COIL 180UH	1	
L504		VLQEL05F100J	COIL	1	
L505		VLQEL05F101K	COIL 100UH	1	
L506		VLQEL05F330J	COIL 33UH	1	
L507		VLQEL05F470J	COIL 47UH	1	
			CONNECTORS		
P501		VJP1248T	CONNECTOR(MALE) 8P	1	

Ref.No.		Part No.	Part Name & Description	Pcs	Remarks
P502		VJP1233T	CONNECTOR(MALE) 6P	1	
			TRANSISTOR		
Q501		2SB709	TRANSISTOR CHIP	1	(Q,R,S)
			RESISTORS		
R501		ERJ6GMYJ102	CHIP 1/16W 1K	1	
R502		ERJ6GMYJ222	CHIP 1/16W 2.2K	1	
R503		ERJ6GMYJ222	CHIP 1/16W 2.2K	1	
R504		ERJ6GMYJ181	CHIP 1/16W 180	1	
R505		ERJ6GMYJ331	CHIP 1/16W 330	1	
R506		ERJ6GMYJ471	CHIP 1/16W 470	1	
R507		ERJ6GMYJ221	CHIP 1/16W 220	1	
R508		ERJ6GMYJ100	CHIP 1/16W 10	1	
R509		ERJ6GMYJ100	CHIP 1/16W 10	1	
R510		ERJ6GMYJ821	CHIP 1/16W 820	1	
R511		ERJ6GMYJ821	CHIP 1/16W 820	1	
R512		ERJ6GMYJ821	CHIP 1/16W 820	1	
R513		ERJ6GMYJ471	CHIP 1/16W 470	1	
R514		ERJ6GMYJ122	CHIP 1/16W 1.2K	1	
R515		ERJ6GMYJ102	CHIP 1/16W 1K	1	
R516		ERJ6GMYJ152	CHIP 1/16W 1.5K	1	
R517		ERJ6GMYJ681	CHIP 1/16W 680	1	
R518		ERJ6GMYJ152	CHIP 1/16W 1.5K	1	
R519		ERJ6GMYJ100	CHIP 1/16W 10	1	
R520		ERJ6GMYJ100	CHIP 1/16W 10	1	
R521		ERJ6GMYJ471	CHIP 1/16W 470	1	
R522		ERJ6GMYJ821	CHIP 1/16W 820	1	
			VARIABLE RESISTORS		
VR501		EVND1AA00B23	VARIABLE 2K	1	
VR502		EVND1AA00B53	VARIABLE 5K	1	
			MISCELLENEOUS		
		VSC1832	SHIELDE CASE	1	TOP
		VSC1833	SHIELDE CASE	1	MAIN
		VSC1834	SHIELDE CASE	1	BOTTOM
	■	VEP06403A	OPERATION C.B.A.		NV-G21PX
		VEP06403B			NV-G21BR
			DIODES		
D6201		LN28RCPP	LED	1	
D6202		LN38GCPPSVT	LED	1	
D6203		MA165	DIODE	1	
			CONNECTORS		
P6201		VJP1249T	CONNECTOR(MALE) 9P	1	
P6202		VJS1952	CONNECTOR (FEMALE)	1	
			RESISTORS		
R6201		ERJ6GMYJ471	CHIP 1/16W 470	1	
R6202		ERJ6GMYJ181	CHIP 1/16W 180	1	
R6204		ERJ6GMYJ472	CHIP 1/16W 4.7K	1	
R6205		ERJ6GMYJ682	CHIP 1/16W 6.8K	1	
R6206		ERJ6GMYJ223	CHIP 1/16W 22K	1	
			SWITCHS		
SW6201		EVQQRC07K	SWITCH	1	NV-G21PX
SW6201		EVQQS307K	SWITCH	1	NV-G21BR
SW6202		EVQQRC07K	SWITCH	1	NV-G21PX
SW6202		EVQQS307K	SWITCH	1	NV-G21BR
SW6204		ESD14519	SWITCH	1	NV-G21PX
SW6205		VSS0187	SWITCH	1	NV-G21BR

Ref.No.		Part No.	Part Name & Description	Pcs	Remarks
			VARIABLE RESISTORS		
VR2007		EVUFSAEC4B15	VARIABLE 1M	1	
VR2008		EVUFSAEC4B15	VARIABLE 1M	1	
VR3004		EVUFRAEC4B24	VARIABLE 20K	1	
			MISCELLENEOUS		
		VGU3435	SW KNOB	1	
		VMD0504	LED HOLDER	2	
	■	VEP07402A	TIMER C.B.A.		NV-G21PX
		VEP07402C			NV-G21BR
					INCLUDING THE IR
					RECIEVER C.B.A.
					(VEP06380C)
			CAPACITORS		
C6701		ECEA0JK470	ELECTROLYTIC 6.3V 47U	1	
C6702		ECKF1H102KB	CERAMIC 50V 1000P	1	
C6703		ECEA1HK010	ELECTROLYTIC 50V 1U	1	
C6704		ECEA1HK3R3	ELECTROLYTIC 50V 3.3U	1	
C7501		ECUX1H080DCN	CHIP 50V 8P	1	
C7502		ECRHA030E41	TRIMER 30P	1	
C7503		ECEA1HKR22	ELECTROLYTIC 50V 0.22U	1	
C7504		ECUX1H220JCN	CHIP 50V 22P	1	
C7505		ECUX1H330JCN	CHIP 50V 33P	1	
C7506		ECEA0JKS101	ELECTROLYTIC 6.3V 100U	1	NV-G21PX
C7510		ECEA1HK100	ELECTROLYTIC 50V 10U	1	
C7511		ECEA0JK221	ELECTROLYTIC 6.3V 220U	1	
C7512		ECQV1H104JZ	MYLAR 50V 0.1U	1	
C7514		ECUX1H103ZFN	CHIP 50V 0.01U	1	
C7515		ECEA1AK470	ELECTROLYTIC 10V 47U	1	
C7586		ECUX1H102KBN	CHIP 50V 1000P	1	
C7588		ECUX1H331KBN	CHIP 50V 330P	1	
			DIODES		
D6701		PN323B	PHOTO DIODE	1	
D7501		11ES1	DIODE	1	
D7502		MA4075M	DIODE	1	
D7503		MA165	DIODE	1	
D7522		MA165	DIODE	1	
D7523		MA165	DIODE	1	NV-G21PX
D7524		MA165	DIODE	1	NV-G21BR
D7525		MA165	DIODE	1	NV-G21PX
D7526		MA165	DIODE	1	NV-G21PX
D7531		MA165	DIODE	1	
D7533		MA165	DIODE	1	NV-G21PX
D7534		MA165	DIODE	1	
D7535		MA165	DIODE	1	
D7536		MA165	DIODE	1	
D7537		MA165	DIODE	1	
D7538		MA165	DIODE	1	
D7539		MA165	DIODE	1	
D7540		MA165	DIODE	1	
D7541		MA165	DIODE	1	
D7542		MA165	DIODE	1	
			DISPLAY TUBE		
DP7501		VSL0102	DISPLAY TUBE	1	
			ICS		
IC6701		UPC1490HA	IC	1	
IC7501		MN15283VJZ	IC	1	
IC7502		MN1226	IC	1	NV-G21PX
IC7502		MN1220	IC	1	NV-G21BR
IC7504		MN1280P	IC	1	
			COIL		

Ref.No.		Part No.	Part Name & Description	Pcs	Remarks
L7501		VLQEL05F221K	COIL 220UH	1	
			CONNECTORS		
P7501		VJS1678	CONNECTOR (FEMALE)	1	
P7502		VJS1937	CONNECTOR (FEMALE)	1	
P7503		VJS1729	CONNECTOR(FEMALE)	1	
P7507		VJP1243T	CONNECTOR(MALE) 3P	1	NV-G21PX
			TRANSISTOR		
Q7501		2SC3311A	TRANSISTOR	1	
			COMBINATION PARTS		
QR7501		UN4113	TRANSISTOR-RESISTOR	1	
QR7502		UN4213	TRANSISTOR-RESISTOR	1	
QR7503		UN4112	TRANSISTOR-RESISTOR	1	
			RESISTORS		
R6701		ERDS2TJ753	CARBON 1/4W 75K	1	
R6702		ERDS2TJ100	CARBON 1/4W 10	1	
R7501		ERJ6GMYJ122	CHIP 1/16W 1.2K	1	
R7502		ERJ6GMYJ224	CHIP 1/16W 220K	1	
R7503		ERJ6GMYJ473	CHIP 1/16W 47K	1	
R7504		ERJ6GMYJ473	CHIP 1/16W 47K	1	
R7507		ERJ6GMYJ104	CHIP 1/16W 100K	1	
R7508		ERJ6GMYJ470	CHIP 1/16W 47	1	
R7509		ERJ6GMYJ102	CHIP 1/16W 1K	1	
R7510		ERJ6GMYJ223	CHIP 1/16W 22K	1	
R7511		ERJ6GMYJ473	CHIP 1/16W 47K	1	
R7527		ERJ6GMYJ103	CHIP 1/16W 10K	1	
R7528		ERJ6GMYJ103	CHIP 1/16W 10K	1	
R7529		ERJ6GMYJ103	CHIP 1/16W 10K	1	
R7530		ERJ6GMYJ182	CHIP 1/16W 1.8K	1	
R7531		ERJ6GMYJ182	CHIP 1/16W 1.8K	1	
R7532		ERJ6GMYJ182	CHIP 1/16W 1.8K	1	
R7533		ERJ6GMYJ182	CHIP 1/16W 1.8K	1	
R7534		ERJ6GMYJ182	CHIP 1/16W 1.8K	1	
R7535		ERJ6GMYJ102	CHIP 1/16W 1K	1	
R7536		ERJ6GMYJ103	CHIP 1/16W 10K	1	
R7537		ERJ6GMYJ102	CHIP 1/16W 1K	1	
			SWITCHS		
SW7501		EVQQS307K	SWITCH	1	
SW7502		EVQQS307K	SWITCH	1	
SW7503		EVQQS307K	SWITCH	1	
SW7504		EVQQS307K	SWITCH	1	
SW7505		EVQQS307K	SWITCH	1	
SW7506		EVQQS307K	SWITCH	1	
SW7507		EVQQS307K	SWITCH	1	
SW7508		EVQQS307K	SWITCH	1	
SW7509		EVQQS307K	SWITCH	1	NV-G21BR
SW7510		EVQQS307K	SWITCH	1	
SW7511		EVQQS307K	SWITCH	1	
SW7513		EVQQS307K	SWITCH	1	
			VARIABLE RESISTORS		
VR6701		EVM1GGA00B54	VARIABLE 50K	1	
			CRYSTAL OSCILLATORS		
X7501		VSX0140	CRYSTAL OSCILLATOR	1	
X7502		VSX0094	CRYSTAL OSCILLATOR	1	
			MISCELLENEOUS		
		VJF0398	DISPLAY HOLDER	1	
		VSC1844	SHILDE CASE	1	MAIN FOR IR RECIEVER

Ref.No.		Part No.	Part Name & Description	Pcs	Remarks
		VSC1928	SHILDE CASE	1	BOTTOM FOR IR
					RECIEVER
		VSC1929	SHILDE PLATE	1	TOP FOR IR RECIEVER
	■	VEQ0536	RF CONVERTER & BOOSTER UNIT		<!>
D1		MA4062M	DIODE	1	
IC1		AN3122	IC	1	
			TRANSISTORS		
Q001		2SC3130	TRANSISTOR	1	
Q002		2SC3130	TRANSISTOR	1	
Q003		2SC3130	TRANSISTOR	1	
Q004		2SC3130	TRANSISTOR	1	
			CRYSTAL OSCILLATOR		
X1		VSX0220	CRYSTAL OSCILLATOR	1	
			NOTE:		
			THE OTHER PARTS FOR		
			RF CONVERTER & ANTENA		
			BOOSTER UNIT ARE		
			NOT AVAILABLE AS SPARE		
			PARTS.		
	■	VEP01272A	POEWR C.B.A.		
					INCLUDING THE SUB
					POWER C.B.A.
					(VEP00J51A)
			CAPACITORS		
C1001		VCK0042	CERAMIC 470P	1	
C1002		VCK0042	CERAMIC 470P	1	
C1003		VCK0042	CERAMIC 470P	1	
C1004		VCK0042	CERAMIC 470P	1	
C1005		VCK0046	CERAMIC 2200P	1	
C1006		VCK0046	CERAMIC 2200P	1	
C1007		VCK0046	CERAMIC 2200P	1	
C1008		VCK0046	CERAMIC 2200P	1	
C1009		ECQU2A104MN	MYLAR 250V 0.100U	1	
C1010		ECOS2GU101F	ELECTROLYTIC 400V 100U	1	
C1011		ECQE6473MZ	MYLAR 630V 0.047U	1	
C1012		ECEA1CGE470	ELECTROLYTIC 16V 47U	1	
C1013		ECQV1H473JZ	MYLAR 50V 0.047U	1	
C1014		ECQV1H333JZ	MYLAR 50V 0.033U	1	
C1015		ECQM1682KZ	MYLAR 100V 0.0068U	1	
C1016		ECQM1472KZ	MYLAR 100V 0.0047U	1	
C1017		ECEB1EG100X	ELECTROLYTIC 25V 10U	1	
C1018		ECEA1HGE470	ELECTROLYTIC 50V 47U	1	
C1019		ECEA1EGE102	ELECTROLYTIC 25V 1000U	1	
C1020		ECEA1EGE102	ELECTROLYTIC 25V 1000U	1	
C1022		ECEA1HGE470	ELECTROLYTIC 50V 47U	1	
C1023		ECEA1AGE102Z	ELECTROLYTIC 10V 1000U	1	
C1024		ECEA0JFE102X	ELECTROLYTIC 6.3V 1000U	1	
C1025		ECEA1HGE470	ELECTROLYTIC 50V 47U	1	
C1027		ECKD3D151KB	CERAMIC 2KV 150P	1	
C1031		VCK0040	CERAMIC 220P	1	
C1032		VCK0040	CERAMIC 220P	1	
C1037		ECQU2A683MN	MYLAR 250V 0.068U	1	
C1039		ECEA1CGE470	ELECTROLYTIC 16V 47U	1	
C1040		ECQP1101JZ	MYLAR 100V 100P	1	
C1041		ECKF1H103ZF	CERAMIC 50V 0.01U	1	
C1042		ECKF1H103ZF	CERAMIC 50V 0.01U	1	
C1050		ECKF1H102KB	CERAMIC 50V 1000P	1	

Ref.No.		Part No.	Part Name & Description	Pcs	Remarks
C1051		ECKF1H221KB	CERAMIC 50V 220P	1	
C1052		ECKF1H221KB	CERAMIC 50V 220P	1	
C1053		VCK0042	CERAMIC 470P	1	
C1054		VCK0042	CERAMIC 470P	1	
			DIODES		
D1001		S1WBA60	DIODE	1	
D1002		ERA22-08	DIODE	1	
D1003		MA178	DIODE	1	
D1004		MA178	DIODE	1	
D1005		MA178	DIODE	1	
D1006		MA178	DIODE	1	
D1007		MA185	DIODE	1	
D1008		MA185	DIODE	1	
D1010		ERD32-01	DIODE	1	
D1013		MA185	DIODE	1	
D1015		ERA82-004	DIODE	1	
D1016		ERA22-02	DIODE	1	
D1019		MA165	DIODE	1	
D1024		MA178	DIODE	1	
D1025		MA178	DIODE	1	
D1026		MA4082H	DIODE	1	
D1028		MA4082	DIODE	1	
D1030		ENB461D-05A	SURGE ABSORBER 460V	1	
			IC		
IC1001		STK5338	IC	1	
			COILS		
L1001		ELF18D410	COIL 22U	1	
L1002		ELC07D220	COIL 22U	1	
			CONNECTOR		
P1001		VJS1903	COIL	1	
			TRANSISTORS		
Q1001		STR11006C	IC	1	
Q1002		2SD638	TRANSISTOR	1	(Q,R,S)
Q1003		2SB643	TRANSISTOR	1	(Q)
			RESISTORS		
R1001		ERC12ZGK685	SOLID 1/2W 6.8M	1	
R1002		ERF2AK2R2	WIRE WOUND 2W 2.2	1	
R1003		ERDS2TJ394	CARBON 1/4W 390K	1	
R1004		ERDS2TJ394	CARBON 1/4W 390K	1	
R1005		ERDS2TJ394	CARBON 1/4W 390K	1	
R1006		ERDS2TJ394	CARBON 1/4W 390K	1	
R1007		ERG3SJ683		1	
R1008		ERF2AKR30	WIRE WOUND 2W 0.3	1	
R1009		ERD25FAJ100	CARBON 1/4W 10	1	
R1010		ERG12SJ470	METAL OXIDE 1/2W 47	1	
R1011		ERDS2TJ222	CARBON 1/4W 2.2K	1	
R1012		ERQ12HJ6R8P	FUSE 1/2W 6.8	1	
R1014		ERD2FCJ4R7	CARBON 2W 4.7	1	
R1015		ERQ12HKR56P	FUSE 1/2W 0.56	1	
R1016		VSF0045		1	
R1017		ERG12ANJ182	METAL OXIDE 1/2W 1800	1	
R1028		ERDS2TJ271	CARBON 1/4W 270	1	
			TRANSFORMER		
T1001		VLT0320	TRANSFORMER	1	
			MISCELLENEOUS		
		VMZ0730	CAPACITOR COVER	1	
		VMZ0955	RESISTOR COVER	1	
		VMZ0996	CAPACITOR COVER	1	

Ref.No.		Part No.	Part Name & Description	Pcs	Remarks
		VSC1831	SHIELDE CASE	1	FOR Q1001
		VJF0318	FUSE HOLDER	4	
	■	VEP66017A	REMOTE CONTROL UNIT C.B.A.		NV-G21PX
			CAPACITORS		
C1		ECEA0GKS101	ELECTROLYTIC 4V 100U	1	
C2		ECKF1H121KB	CERAMIC 50V 120P	1	
C3		ECKF1H101KB	CERAMIC 50V 100P	1	
C4		ECQB1H222KH	MYLAR 50V 2200P	1	
			DIODES		
D1		SE303AY	DIODE	1	
D2		MA165	DIODE	1	
D3		MA165	DIODE	1	
D4		MA165	DIODE	1	
D5		MA165	DIODE	1	
D6		MA165	DIODE	1	
D7		MA165	DIODE	1	
D8		MA154WK	DIODE	1	
D9		MA154WK	DIODE	1	
			IC		
IC1		MN6011H	IC	1	
			COMBINATION PARTS		
QR1		UN1231	TRANSISTOR-RESISTOR	1	
			RESISTORS		
R1		ERDS2TJ1R0	CARBON 1/4W 1.0	1	
			CRYSTAL OSCILLATOR		
X1		EFOA455K06A1	CRYSTAL OSCILLATOR	1	
			MISCELLENEOUS		
		VJR0253	ELECTRODE (+)	1	
		VJR0254	ELECTRODE (-)	1	
	■	VEP22063C	REMOTE CONTROL UNIT C.B.A.		NV-G21BR
			CAPACITORS		
C1		ECKF1H471KB	CERAMIC 50V 470P	1	
C2		ECKF1H471KB	CERAMIC 50V 470P	1	
C3		ECEA0GKS101	ELECTROLYTIC 4V 100U	1	
			DIODE		
D1		SE303AY	DIODE	1	
			IC		
IC1		UPD6128C	IC	1	
			COMBINATION PART		
QR1		UN1231	TRANSISTOR-RESISTOR	1	
			RESISTORS		
R1		ERDS2TJ1R0	CARBON 1/4W 1	1	
R2		ERDS2TJ682	CARBON 1/4W 6.8K	1	

Ref.No.		Part No.	Part Name & Description	Pcs	Remarks
			CRYSTAL OSCILLATOR		
X1		VSX0181	CRYSTAL OSCILLATOR	1	
			MISCELLENEOUS		
		VJR0183	ELECTRODE	2	
	■	VEP00H22A	CYLINDER DRIVE C.B.A.		
			CAPACITOR		
C2901		ECEA1VSN2R2	ELECTROLYTIC 35V 2.2U	1	
C2902		ECEA1VSN2R2	ELECTROLYTIC 35V 2.2U	1	
C2903		ECEA1VSN2R2	ELECTROLYTIC 35V 2.2U	1	
C2904		ECEA1HKSR22	ELECTROLYTIC 50V 22U	1	
C2905		ECEA1HKSR22	ELECTROLYTIC 50V 22U	1	
C2906		ECEA1HKSR22	ELECTROLYTIC 50V 22U	1	
C2907		ECEA1HKSR33	ELECTROLYTIC 50V 33U	1	
C2908		ECQV1H473JZ	MYLAR 50V 0.047U	1	
C2909		ECQV1H104JZ	MYLAR 50V 0.1U	1	
C2910		ECEA1CKS100	ELECTROLYTIC 16V 10U	1	
			INTEGRATED CIRCUIT		
IC2901		AN3812K	IC	1	
			RESISTOR		
R2901		ERX12ANJR68	METAL OXIDE 1/4V 0.68	1	
			CONNECTORS		
P2901		VJP1232	CONNECTOR	1	
P2902		VJP1927	CONNECTOR	1	
			MISCELLANEOUS		
		VSC1843	HEATSINK	1	
		VMA6884	MAIN HOLDER	1	
	■	VEP00H30A	MECHANISM CONNECTION C.B.A.		
			CONNECTORS		
P1504		VJP1939	CONNECTOR	1	
P1505		VJP1242T	CONNECTOR	1	
			RESISTOR		
R1501		ERDS2TJ223	CARBON 1/4W 22K	1	
	■	VEP00H31A	REEL SENSOR C.B.A.		
			INTEGRATED CIRCUIT		

Ref.No.		Part No.	Part Name & Description	Pcs	Remarks
IC1501		ON2170	IC	1	
			CONNECTOR		
P1506		VJP1242	CONNECTOR 2P	1	
	■	VXA2689	LED C.B.A. UNIT		
			DIODE		
D1501		GL450	PHOTO DIODE	1	
			MISCELLANEOUS		
		VMD0911	LED HOLDER	1	
		VWJ0254	FLEXIBLE WIRE	1	
	■	VEP00H34A	PHOTO TR(T) C.B.A.		
			CAPACITOR		
C1502		ECKW1H102KBN	CERAMIC 50V 1000P	1	
			RESISTOR		
R1503		ERDS2TJ222	CARBON 1/4W 2.2K	1	
			CONNECTORS		
P1503		VJS1936	CONNECTOR	1	
P1508		VJP1242T	CONNECTOR	1	
			TRANSISTOR		
Q1502		PN150NV	PHOTO TRANSISTOR	1	
			MISCELLANEOUS		
		VMD0645	PHOTO TR HOLDER	1	
	■	VEP00H35A	PHOTO TR(S) C.B.A.		
			CAPACITOR		
C1501		ECKW1H102KBN	CERAMIC 50V 1000P	1	
			TRANSISTOR		
Q1501		PN150NV	PHOTO TRANSISTOR	1	
			MISCELLANEOUS		

Ref.No.		Part No.	Part Name & Description	Pcs	Remarks
		VMD0645	PHOTO TR HOLDER	1	
	■	VEQ0536	RF CONVERTER		<!>
			DIODE		
D1		MA4062M	ZENER	1	
			INTEGRATED CIRCUIT		
IC1		AN3122	IC	1	
			TRANSISTORS		
Q1		2SC3130	TRANSISTOR	1	
Q2		2SC3130	TRANSISTOR	1	
Q3		2SC3130	TRANSISTOR	1	
Q4		2SC3130	TRANSISTOR	1	
			CRYSTAL OSCILLATOR		
X1		VSX0220	CRYSTAL OSCILLATOR	1	

3.NV-G20PX/PN,NV-G19MX Mechanical Replacement Parts List

Note:1.* Be sure to make your orders of replacement parts according to this list.
2.IMPORTANT SAFETY NOTICE
Components identified with the mark <!> have the special characteristics for safety. When replacing any of these components,use only the same type.

Ref.No.		Part No.	Part Name & Description	Pcs	Remarks
1(1)		VHD0268	HEAD AMP SET SCREW	3	
2(1)		VMA6897	HEAD AMP MOUNT ANGLE (L)	1	
3(1)		VMA6898	HEAD AMP MOUNT ANGLE (R)	1	
4(1)		VEK3185	DEW SENSOR UNIT	1	
5(1)		VXA2702	EARTH PLATE UNIT	1	
6(1)		VEG0510	CYLINDER UNIT	1	<!>
7(1)		VEH0350	UPPER CYLINDER UNIT	1	
9(1)		VXA2703	MAIN HOLDER UNIT	1	
10(1)		VSC1806	CYLINDER C.B.A SHIELD PLATE	1	
11(1)		VXL1495	TENSION ARM (1) UNIT	1	
12(1)		VMB1563	TENSION SPRING	1	
13(1)		VXZ0225	TENSION BAND UNIT	1	
14(1)		VXR0145	SUPPLY REEL TABLE UNIT	1	
15(1)		VMX1171	REEL WASHER	2	
16(1)		VXL1496	TENSION RELEASE ARM(A)UNIT	1	
17(1)		VBS0038	FE HEAD	1	
18(1)		VXA2705	TENSION ARM BASE (1) UNIT	1	
19(1)		VMA6895	MOUNT ANGLE (L)	1	
20(1)		VMX1079	CUT WASHER	5	
21(1)		VXL1497	TENSION RELEASE ARM(B)UNIT	1	
22(1)		VMB1582	TENSION RELEASE SPRING	1	
23(1)		VES0350	SAFETY SW	1	
24(1)		VXZ0229	SUPPLY MAIN BRAKE UNIT	1	
25(1)		VXZ0228	SUPPLY SOFT BRAKE(1)UNIT	1	
26(1)		VMB1564	SUPPLY SOFT BRAKE SPRING	1	
27(1)		VXZ0231	TAKE UP MAIN BRAKE UNIT	1	
28(1)		VXZ0221	TAKE UP SOFT BRAKE UNIT	1	
29(1)		VMB1561	TAKE UP SOFT BRAKE SPRING	1	
30(1)		VMA6896	MOUNT ANGLE (R)	1	
31(1)		VHD0322	ADJUST SCREW	1	
32(1)		VMB1251	ADJUST SPRING	1	
33(1)		VHD0089B	AZIMUTH ADJUST SCREW	1	
34(1)		VBR0102	A/C HEAD	1	
35(1)		VHN0063	M4 NYLON NUT	1	
36(1)		VHN0050	ADJUST NUT	1	
37(1)		VXA2675	HEAD BASE UNIT	1	
38(1)		VMB1567	A/C HEAD SPRING	1	
39(1)		VXL1480	SUB LOADING ARM (1) UNIT	1	
40(1)		VMB1566	SUB POST SPRING	1	
41(1)		VXQ0006	THRUST SCREW UNIT	1	
42(1)		VHD0317	HOUSING SCREW	3	
43(1)		VMX1033	OIL SEAL	2	
44(1)		VMX1151	PINCH CAM CAP	1	
45(1)		VXL1629	PRESSURE ROLLER UNIT	1	
46(1)		VMB1568	PIN PRESSURE SPRING	1	
47(1)		VML1873	PINCH PRESSURE ARM	1	
48(1)		VMB1569	PINCH PRESSURE ARM RELEASE SPRING	1	
49(1)		VML1874	PINCH LIFT ARM	1	
50(1)		VDG0357	P5 PULL OUT SECTOR GEAR	1	
51(1)		VDG0421	PINCH CAM	1	
52(1)		VHN0023	M3 NYLON NUT	1	
53(1)		VXL1485	P5 UNIT	1	
54(1)		VMB1554	P5 SPRING	1	
55(1)		VSS0175A	MODE SW	1	
56(1)		VSC1851	SHIELD PLATE	1	
57(1)		VXP0863	ROLLER POST UNIT	1	
58(1)		VXA2729	INCLIND BASE (S)(1)UNIT	1	
59(1)		VHD0133	ROLLER POST SCREW	2	
60(1)		VMD0910	POST STOPPER	2	
61(1)		VXP0764A	ROLLER POST UNIT	1	
62(1)		VXA2686	INCLIND BASE(T)(1)UNIT	1	
63(1)		VXA2687	INCLIND ADJUST PLATE UNIT	1	
64(1)		VDG0334	PINCH SPEED DOWN GEAR	1	
65(1)		VDG0332	CONNECTION GEAR	1	
66(1)		VXA2693	SOLENOID	1	
67(1)		VXA2692	KICK ROD UNIT	1	
68(1)		VXA2691	SOLENOID LEVER (1) UNIT	1	
69(1)		VMB1553	KICK ROD SPRING	1	
70(1)		VMB1565	MAIN BRAKE SPRING	1	
71(1)		VXR0146	TAKE UP REEL TABLE UNIT	1	
72(1)		VXD0101	HOUSING UNIT	1	
73(1)		VHD0342	CYLINDER UNIT MOUNT SCREW	3	
74(1)		VSC1843	HEAT SINK PLATE	1	
100(2)		VMX1079	CUT WASHER	8	
101(2)		VMB1583	TAKE UP SOFT BRAKE RELEASE ARM SPRING	1	
102(2)		VMB1560	MAIN LEVER SPRING	1	
103(2)		VXA2701	MAIN LEVER (1) UNIT	1	
104(2)		VMM0160	SUB LEVER	1	
105(2)		VXL1500	SS BRAKE ARM UNIT	1	
106(2)		VMB1588	SS BRAKE SPRING	1	
107(2)		VXA2707	SS BRAKE BASE (1) UNIT	1	
108(2)		VXA2674	TENSION ROLLER UNIT	1	
109(2)		VXL1491	CAM FOLLOWER ARM UNIT	1	
110(2)		VML1861	DETENT ARM	1	
111(2)		VDG0346	MAIN CAM GEAR	1	
112(2)		VDG0343	SUB CAM GEAR	1	
113(2)		VDG0348	CENTRE GEAR	1	
114(2)		VDG0344	RETAINER GEAR	1	
115(2)		VDG0345	PLANET GEAR	2	
116(2)		VDG0349	CLUTCH DISK	1	
117(2)		VMB1558	CLUTCH SPRING	1	
118(2)		VDG0350	LOCK SLIDE GEAR	1	
119(2)		VDG0335	DRIVE DISK	1	
120(2)		VDG0342	RING GEAR	1	
121(2)		VMX0967	CUT WASHER	2	
122(2)		VML1859	CHANGE LEVER	1	
123(2)		VXA2672	RELEASE LEVER (1) UNIT	1	
124(2)		VMB1557	RELEASE SPRING	1	
125(2)		VML1860	RELEASE LEVER	1	
126(2)		VMX1124	REEL GEAR RING	2	
127(2)		VXP0779	TAKE UP REEL GEAR UNIT	1	
128(2)		VDG0337	SUPPLY REEL GEAR	1	
129(2)		VML1858	RETURN LEVER (R)	1	
130(2)		VML1857	RETURN LEVER (L)	1	
131(2)		VMD0913	STOPPER BASE	1	
132(2)		VDV0159	TIMING BELT	1	
133(2)		VXP0777	ROTOR UNIT	1	
134(2)		VMA6998	ROTOR STOPPER	1	
135(2)		VEK2944	STATOR UNIT	1	<!>
136(2)		VMA6847	SUB PLATE	1	
137(2)		VXP0767	CENTRE PULLEY UNIT	1	
138(2)		VDG0340	LOADING GEAR (T)	1	
139(2)		VMB1555	LOADING SPRING	2	
140(2)		VXL1489	LOADING ARM (T)(1) UNIT	1	
141(2)		VXA2673	SECTOR GEAR UNIT	1	
142(2)		VDG0347	LOADING CAM GEAR	1	
143(2)		VDG0339	LOADING GEAR (S)	1	
144(2)		VML1855	PLAY CONTROL ARM	1	
145(2)		VXL1487	LOADING ARM (S)(1) UNIT	1	
146(2)		VDG0336	INTERMEDIATE GEAR	1	
147(2)		VXL1490	PLAY ARM UNIT	1	
148(2)		VBK0048	FG HEAD	1	
201(3)		VMA6903	TOP PLATE	1	
202(3)		VXA2679	CASSETTE HOLDER UNIT	1	
203(3)		VMB1573	MOUNT LEVER SPRING	1	
204(3)		VMD0919	HOLDER GUIDE (L)	1	
205(3)		VMM0163	MOUNT LEVER	1	
206(3)		VDP1077	ROLLER	2	
207(3)		VML1883	PRESSURE LEVER (L)	1	
208(3)		VMA6902	HOLDER ANGLE	1	
209(3)		VMA6901	CASSETTE HOLDER	1	
210(3)		VML1882	OPENER LEVER	1	
211(3)		VML1884	PRESSURE LEVER (R)	1	
212(3)		VMB1584	OPENER LEVER SPRING	1	
213(3)		VMD0920	HOLDER GUIDE (R)	1	
214(3)		VMB1576	RELEASE SPRING	1	
215(3)		VML1881	RELEASE LEVER	1	
216(3)		VXA2676	SIDE PLATE (L) UNIT	1	
217(3)		VMD0917	SIDE PLATE (L)	1	
218(3)		VML1880	OPENER LEVER	1	
219(3)		VXA2677	SIDE PLATE (R) UNIT	1	
220(3)		VMD0918	SIDE PLATE (R)	1	
221(3)		VSS0176	SLIDE SW	1	

Ref.No.		Part No.	Part Name & Description	Pcs	Remarks
222(3)		VML1886	DOWN SUPPORT LEVER	1	
223(3)		VMB1575	DOWN SUPPORT SPRING	1	
224(3)		VXA2695	RACK (A)(1) UNIT	1	
225(3)		VMB1572	CLUTCH SPRING	1	
226(3)		VMB1574	LOCK SPRING	1	
227(3)		VML1885	LOCK LEVER	1	
228(3)		VXA2829	RACK (B) UNIT	1	
229(3)		VXP0851	MAIN SHAFT UNIT	1	
230(3)		VMB1570	SUB WIPER SPRING (L)	1	
231(3)		VML1878	SUB WIPER ARM	1	
232(3)		VML1879	SUB WIPER ARM (R)	1	
233(3)		VMB1571	SUB WIPER SPRING (R)	1	
234(3)		VMA6900	CASSETTE GUIDE	1	
235(3)		VKF0848	BLINDER PANEL	1	
236(3)		VMB1258	BLINDER SPRING	1	
237(3)		VMB1650	RACK (C) SPRING	1	
238(3)		VMA7062	CONNECTION ROD	1	
239(3)		VMB1686	CONNECTION ROD	1	
300(4)		VYP1904	TOP PANEL UNIT	1	
301(4)		VHD0304	TOP PANEL SCREW	4	
310(4)		VJF0139	AC CORD CLAMPER	1	
313(4)		VGH1239	POWER NAME PLATE	1	
314(4)		VSC1827	SHIELD CASE (L)	1	
315(4)		VMZ1018	BARRIER (A)	1	<!>
316(4)		VMZ1053	BARRIER (B)	1	<!>
318(4)		VSC1830	HEAT SINK	1	
319(4)		VSC2045	SHIELD CASE MAIN	1	
320(4)		VMZ0876	INSULATION SHEET	2	<!>
321(4)		VGQ1109	TR. HOLDER	1	
322(4)		VMZ1030	BARRIER (C)	1	NV-G20PX/PN <!>
324(4)		VSC1829	SHIELD CASE (R)	1	
326(4)		VMP1038	TOP HOLDER ANGLE (R)	1	
327(4)		VMP1037	TOP HOLDER ANGLE (L)	1	
328(4)		VKA0026	RUBBER FOOT	2	
329(4)		VJF0285	WIRE SUDDLE	2	
334(4)		VYP1907	FRONT PANEL UNIT	1	NV-G20PX
334(4)		VYP1917	FRONT PANEL UNIT	1	NV-G20PN
334(4)		VYP1918	FRONT PANEL UNIT	1	NV-G19MX
335(4)		VYF1052	FRONT DOOR UNIT	1	NV-G20PX
335(4)		VYF1058	FRONT DOOR UNIT	1	NV-G20PN
335(4)		VYF1057	FRONT DOOR UNIT	1	NV-G19MX
336(4)		VKU0245	BOTTOM PLATE	1	
337(4)		VHD0059	BOTTOM SCREW	7	
339(4)		VEJ0564	ANT TERMINAL	1	
340(4)		VJA0419	AC CORD	1	
342(4)		VGQ0550	LATCH	1	
343(4)		VMC0258	EARTH SPRING	1	
398(5)		VSQ0057	300ohm-75ohm TRANSFORMER	1	
399(5)		VJSS0070	POWER PLUG ADAPTOR	1	NV-G20PX/PN
400(5)		VQT2229	OPERATING INSTRUCTIONS	1	NV-G20PX <!>
400(5)		VQT2230	OPERATING INSTRUCTIONS	1	NV-G20PN <!>
400(5)		VQT2243	OPERATING INSTRUCTIONS	1	NV-G19MX <!>
401(5)		VJA0102	TWIN LEAD CABLE(FLAT)	1	
402(5)		VJA0322	COAXIAL CABLE WITH SPLITTER	1	
403(5)		VEQ0559	REMOTE CONTROLLER UNIT	1	NV-G20PX,NV-G19MX
403(5)		VEQ0560	REMOTE CONTROLLER UNIT	1	NV-G20PN
404(5)		VPN1851	CUSHION (R)	1	
405(5)		VPN1852	CUSHION (L)	1	
406(5)		VPG3359	PACKING CASE	1	NV-G20PX
406(5)		VPG3360	PACKING CASE	1	NV-G20PN
406(5)		VPG3377	PACKING CASE	1	NV-G19MX
450(6)		VYK1636	TOP CASE UNIT	1	NV-G20PX,NV-G19MX
450(6)		VYK1637	TOP CASE UNIT	1	NV-G20PN
451(6)		VKW0617	IR WINDOE	1	
452(6)		VJR0185	ELECTRODE (COMMON)	1	
453(6)		VSP0242	RUBBER CONTACT	1	
454(6)		VKM0856	BOTTOM CASE	1	
455(6)		VKF0628	BATTERY COVER	1	

Ref.No.		Part No.	Part Name & Description	Pcs	Remarks
			JIG		
		VFM808OHMFP	VHS-ALIGNMENT TAPE	1	
		VFK0335	RETAINING RING REMOVER	1	
			(3mm/4mm)		
		VFK0387	TENSION POST ADJUSTMENT	1	
			PLATE		
		VFK0191	POST ADJUSTMENT PLATE	1	
		VFK0190	REEL TABLE HEIGHT GAUGE	1	
		VFK0328	H-POSITION ADJ.	1	
			SCREWDRIVER		
		VFK0329	POST ADJUSTMENT SCREWDRIVER	1	
		VFK62	FAN TYPE TENSION GAUGE	1	
		VFK0326	HEX WRENCH SET	1	
		VFK0132	BACK TENSION METER	1	
		VFK0343	CHECK LIGHT	1	
		VFK0344	HEIGHT ADJUSTMENT JIG	1	
		VFK27	HEAD CLEANING STICK	1	
		MOR265	MORLYTONE GREASE	1	
		VFK0283	SERVICE ALIGNMENT TOOL KIT	1	
		VFK0341	UPPER CYLINDER REMOVER	1	

4.NV-G20PX/PN,NV-G19MX Electrical Replacement Parts List

Note:1.* Be sure to make your orders of replacement parts according to this list.
2.IMPORTANT SAFETY NOTICE
Components identified with the mark <!> have the special characteristics for safety. When replacing any of these components,use only the same type.
3.Unless otherwise specified,
All resistors are in OHMS ,K=1,000 OHMS. All capacitors are in MICRO-FARADS(uf),P=uuF.
4.The P.C.Board units marked width'■'show below the main assembled parts.

Ref.No.		Part No.	Part Name & Description	Pcs	Remarks
		VEP03407B	MAIN C.B.A.	1	NV-G20PX,NV-G19MX <!>
			(SYSTEM CONTROL, SERVO,		INCLUDING THE SERVO
			LUMINANCE & CHROMINANCE,		PACK C.B.A.
			AUDIO, TV DEMODULATOR)		(VEP02284B),SUB SERVO
					PACK C.B.A.
					(VEP02289A),LUMINANCE
					& CHROMINANCE PACK
					C.B.A.(VEP03406A),
					TV DEMODULATOR PACK
					C.B.A.(VEP07348G),
					TUNER ARU PACK C.B.A.
					(VEP07349G).
		VEP03407C	MAIN C.B.A.	1	NV-G20PN <!>
			(SYSTEM CONTROL, SERVO,		INCLUDING THE SERVO
			LUMINANCE & CHROMINANCE,		PACK C.B.A.
			AUDIO, TV DEMODULATOR)		(VEP02284B),SUB SERVO
					PACK C.B.A.
					(VEP02289A),LUMINANCE
					& CHROMINANCE PACK
					C.B.A.(VEP03406A),
					TV DEMODULATOR PACK
					C.B.A.(VEP07348G),
					TUNER ARU PACK C.B.A.
					(VEP07349F).
		VEP02284B	SERVO PACK C.B.A.	1	INCLUDING THE SUB
					SERVO PACK C.B.A.
					(VEP02289A).
					PARTS LIST IS
					INCLUDED IN MAIN
					C.B.A.
		VEP02289A	SUB SERVO PACK C.B.A.	1	PARTS LIST IS
					INCLUDED IN MAIN
					C.B.A.
		VEP03406A	LUMINANCE & CHROMINANCE	1	PARTS LIST IS
			PACK C.B.A.		INCLUDED IN MAIN
					C.B.A.
		VEP07348G	TV DEMODULATOR PACK C.B.A.	1	NV-G20PX,NV-G19MX
					PARTS LIST IS
					INCLUDED IN MAIN
					C.B.A.
		VEP07349G	TUNER ARU PACK C.B.A.	1	NV-G20PX,NV-G19MX
					PARTS LIST IS
					INCLUDED IN MAIN
					C.B.A.

Ref.No.		Part No.	Part Name & Description	Pcs	Remarks
		VEP07349F	TUNER ARU PACK C.B.A.	1	NV-G20PN
					PARTS LIST IS
					INCLUDED IN MAIN
					C.B.A.
		VEP07401A	TIMER C.B.A.	1	NV-G20PX,NV-G19MX
		VEP07401C	TIMER C.B.A.	1	NV-G20PN
		VEP06411B	OPERATION C.B.A.	1	INCLUDING THE IR
					RECEIVER C.B.A.
					(VEP06380C).
		VEP06380C	IR RECEIVER C.B.A.	1	PARTS LIST IS
					INCLUDED IN OPERATION
					C.B.A.
		VEP05097H	HEAD AMP PACK C.B.A.	1	
		VEP01272A	POWER C.B.A.	1	NV-G20PX/PN <!>
					INCLUDING THE POWER
					SUB C.B.A.(VEP00J51A)
		VEP01272D	POWER C.B.A.	1	NV-G19MX <!>
		VEP00J51A	POWER SUB C.B.A.	1	NV-G20PX/PN <!>
					PARTS LIST IS
					INCLUDED IN POWER
					C.B.A.
		VEP22063C	REMOTE CONTROL UNIT C.B.A.	1	
		VEP00H22A	CYLINDER DRIVE C.B.A.	1	
		VEP00H30A	MECHANISM CONNECTION C.B.A.	1	
		VEP00H31A	REEL SENSOR C.B.A.	1	
		VXA2689	LED C.B.A. UNIT	1	
		VEP00H34A	PHOTO TR(T) C.B.A.	1	
		VEP00H35A	PHOTO TR(S) C.B.A.	1	
		VEQ0536	RF CONVERTER	1	<!>
		TNV56809F2	TUNER	1	OR VSQ0556
					NV-G20PX,NV-G19MX <!>
		TNV76803F2	TUNER	1	NV-G20PN <!>
F1001		XBA2C20NU0	FUSE 250V 2A	1	<!>
F1002		XBA1C30NU100	FUSE 125V 3A	1	<!>

Ref.No.		Part No.	Part Name & Description	Pcs	Remarks
	■	VEP03407B	MAIN C.B.A.		NV-G20PX,NV-G19MX
	■	VEP03407C	(SYSTEM CONTROL, SERVO,		NV-G20PN
			LUMINANCE & CHROMINANCE,		
			AUDIO, TV DEMODULATOR)		
			CAPACITORS		
C202		ECEA1HKR47	ELECTROLYTIC 50V 0.47U	1	
C203		ECQB1H223KH	MYLAR 50V 0.022U	1	
C204		ECEA1CKN100	ELECTROLYTIC 16V 10U	1	
C205		ECQV1H473JZ	MYLAR 50V 0.047U	1	
C206		ECEA1CK100	ELECTROLYTIC 16V 10U	1	
C207		ECEA1CK100	ELECTROLYTIC 16V 10U	1	
C208		ECEA1HKN010	ELECTROLYTIC 50V 1U	1	
C209		ECEA1HKN010	ELECTROLYTIC 50V 1U	1	
C210		ECEA0JK220	ELECTROLYTIC 6.3V 22U	1	
C211		ECEA0JK220	ELECTROLYTIC 6.3V 22U	1	
C212		ECQV1H104JZ	MYLAR 50V 0.1U	1	
C213		ECQV1H683JZ	MYLAR 50V 0.068U	1	
C214		ECUX1H102KBN	CHIP 50V 1000P	1	
C215		ECEA1HKNR47	ELECTROLYTIC 50V 0.47U	1	
C216		ECQV1H473JZ	MYLAR 50V 0.047U	1	
C217		ECEA1HKR47	ELECTROLYTIC 50V 0.47U	1	
C218		ECUX1H472KBN	CHIP 50V 4700P	1	
C219		ECQV1H274JZ	MYLAR 50V 0.27U	1	
C220		ECUX1H103ZFN	CHIP 50V 0.01U	1	
C221		ECQV1H104JZ	MYLAR 50V 0.1U	1	
C222		ECQB1H103JH	MYLAR 50V 0.01U	1	
C223		ECUX1H562KBN	CHIP 50V 5600P	1	
C224		ECEA0JK470	ELECTROLYTIC 6.3V 47U	1	
C225		ECEA0JK470	ELECTROLYTIC 6.3V 47U	1	
C226		ECUX1H103ZFN	CHIP 50V 0.01U	1	
C227		ECUX1H332KBN	CHIP 50V 3300P	1	
C228		ECUX1H103ZFN	CHIP 50V 0.01U	1	
C229		ECQV1H274JZ	MYLAR 50V 0.27U	1	
C230		ECEA1CK100	ELECTROLYTIC 16V 10U	1	
C231		ECEA1HKNR47	ELECTROLYTIC 50V 0.47U	1	
C232		ECEA1CK100	ELECTROLYTIC 16V 10U	1	
C233		ECEA1HK010	ELECTROLYTIC 50V 1U	1	
C234		ECUX1H103ZFN	CHIP 50V 0.01U	1	
C235		ECEA0JK470	ELECTROLYTIC 6.3V 47U	1	
C236		ECQB1H223KH	MYLAR 50V 0.022U	1	
C237		ECQB1H562JH	MYLAR 50V 5600P	1	
C238		ECEA0JK101	ELECTROLYTIC 6.3V 100U	1	
C239		ECEA0JK221	ELECTROLYTIC 6.3V 220U	1	
C240		ECEA1CK100	ELECTROLYTIC 16V 10U	1	
C241		ECEA0JK470	ELECTROLYTIC 6.3V 47U	1	
C242		ECUX1H103ZFN	CHIP 50V 0.01U	1	
C243		ECUX1H103ZFN	CHIP 50V 0.01U	1	
C244		ECEA1HK4R7	ELECTROLYTIC 50V 4.7U	1	
C245		ECQB1H223KH	MYLAR 50V 0.022U	1	
C246		ECQV1H104JZ	MYLAR 50V 0.1U	1	
C248		ECUX1H102KBN	CHIP 50V 1000P	1	
C249		ECEA0JK221	ELECTROLYTIC 6.3V 220U	1	
C250		ECQV1H473JZ	MYLAR 50V 0.047U	1	
C271		ECEA1CK100	ELECTROLYTIC 16V 10U	1	
C272		ECEA1EK3R3	ELECTROLYTIC 25V 3.3U	1	
C273		ECUX1H182KBN	CHIP 50V 1800P	1	
C301		ECEA0JK220	ELECTROLYTIC 6.3V 22U	1	
C302		ECEA0JU221	ELECTROLYTIC 6.3V 220U	1	
C303		ECUX1H221KN	CHIP 50V 220P	1	
C304		ECEA1EK3R3	ELECTROLYTIC 25V 3.3U	1	
C305		ECUX1H121JCN	CHIP 50V 120P	1	
C306		ECEA0JK101	ELECTROLYTIC 6.3V 100U	1	
C307		ECUX1H103ZFN	CHIP 50V 0.01U	1	
C308		ECEA1CK100	ELECTROLYTIC 16V 10U	1	
C309		ECEA1CK100	ELECTROLYTIC 16V 10U	1	
C310		ECEA0JK220	ELECTROLYTIC 6.3V 22U	1	
C311		ECUX1H820JCN	CHIP 50V 82P	1	
C313		ECUX1H121JCN	CHIP 50V 120P	1	

Ref.No.		Part No.	Part Name & Description	Pcs	Remarks
C314		ECUX1H220JCN	CHIP 50V 22P	1	
C315		ECEA1CK101	ELECTROLYTIC 16V 100U	1	
C317		ECUX1H151JCN	CHIP 50V 150P	1	
C319		ECUX1H151JCN	CHIP 50V 150P	1	
C320		ECUX1H330JCN	CHIP 50V 33P	1	
C321		ECUX1H101JCN	CHIP 50V 100P	1	
C322		ECEA0JU221	ELECTROLYTIC 6.3V 220U	1	
C323		ECEA1EK3R3	ELECTROLYTIC 25V 3.3U	1	
C324		ECUX1H103ZFN	CHIP 50V 0.01U	1	
C326		ECUX1H470JCN	CHIP 50V 47P	1	
C327		ECEA1EK3R3	ELECTROLYTIC 25V 3.3U	1	
C328		ECEA1EK3R3	ELECTROLYTIC 25V 3.3U	1	
C329		ECEA1EKN3R3	ELECTROLYTIC 25V 3.3U	1	
C330		ECEA1HK2R2	ELECTROLYTIC 50V 2.2U	1	
C331		ECEA1HK010	ELECTROLYTIC 50V 1U	1	
C332		ECEA1HKR47	ELECTROLYTIC 50V 0.47U	1	
C701		ECEA1CKS220	ELECTROLYTIC 16V 22U	1	
C702		ECEA1CKS100	ELECTROLYTIC 16V 10U	1	
C703		ECEA1HK2R2	ELECTROLYTIC 50V 2.2U	1	
C705		ECEA1CKS100	ELECTROLYTIC 16V 10U	1	
C706		ECQV1H823JZ	MYLAR 50V 0.082U	1	
C707		ECEA1HK0R1	ELECTROLYTIC 50V 0.1U	1	
C708		ECEA1CKS220	ELECTROLYTIC 16V 22U	1	
C709		ECEA1CKS220	ELECTROLYTIC 16V 22U	1	
C710		ECUX1H103ZFN	CHIP 50V 0.01U	1	
C715		ECUX1H103ZFN	CHIP 50V 0.01U	1	
C716		ECUX1H103ZFN	CHIP 50V 0.01U	1	
C717		ECUX1H103ZFN	CHIP 50V 0.01U	1	
C718		ECUX1H103ZFN	CHIP 50V 0.01U	1	
C719		ECUX1H103ZFN	CHIP 50V 0.01U	1	
C720		ECUX1H103ZFN	CHIP 50V 0.01U	1	
C721		ECEA1HKR27	ELECTROLYTIC 50V 0.27U	1	
C722		ECUX1H103ZFN	CHIP 50V 0.01U	1	
C723		ECUX1H220JCN	CHIP 50V 22P	1	
C725		ECQV1H104JZ	MYLAR 50V 0.1U	1	
C728		ECUX1H103ZFN	CHIP 50V 0.01U	1	
C730		ECEA1CKS100	ELECTROLYTIC 16V 10U	1	
C731		ECEA1CK100	ELECTROLYTIC 16V 10U	1	
C732		ECQV1H224JZ	MYLAR 50V 0.22U	1	
C734		ECUX1H103ZFN	CHIP 50V 0.01U	1	
C735		ECUX1H080DCN	CHIP 50V 8P	1	
C736		ECQB1H103JH	MYLAR 50V 0.01U	1	
C737		ECUX1H331JCN	CHIP 50V 330P	1	
C739		ECEA1HK010	ELECTROLYTIC 50V 1U	1	
C740		ECUX1H103ZFN	CHIP 50V 0.01U	1	
C741		ECEA1CK100	ELECTROLYTIC 16V 10U	1	
C743		ECUX1H270JSN	CHIP 50V 27P	1	
C744		ECEA1HKR47	ELECTROLYTIC 50V 0.47U	1	
C745		ECUX1H470JPN	CHIP 50V 47P	1	
C746		ECUX1H100DCN	CHIP 50V 10P	1	
C747		ECUX1H103ZFN	CHIP 50V 0.01U	1	
C748		ECEA1CK330	ELECTROLYTIC 16V 33U	1	
C749		ECEA1CK100	ELECTROLYTIC 16V 10U	1	
C760		ECQV1H823JZ	MYLAR 50V 0.082U	1	
C781		ECUX1H470JCN	CHIP 50V 47P	1	
C782		ECCF1H060DC	CERAMIC 50V 6P	1	
C801		ECUX1H220JCN	CHIP 50V 22P	1	
C802		ECEA1EK3R3	ELECTROLYTIC 25V 3.3U	1	
C803		ECEA1HK010	ELECTROLYTIC 50V 1U	1	
C804		ECUX1H222KBN	CHIP 50V 2200P	1	
C805		ECEA1HK010	ELECTROLYTIC 50V 1U	1	
C806		ECEA0JK220	ELECTROLYTIC 6.3V 22U	1	
C807		ECUX1H080DCN	CHIP 50V 8P	1	
C808		ECUX1H102KBN	CHIP 50V 1000P	1	
C809		ECEA0JK470	ELECTROLYTIC 6.3V 47U	1	
C810		ECUX1H103ZFN	CHIP 50V 0.01U	1	
C811		ECUX1H271JN	CHIP 50V 270P	1	
C812		ECEA10Z330	ELECTROLYTIC 10V 33U	1	
C813		ECUX1H271JN	CHIP 50V 270P	1	
C814		ECUX1H471KBN	CHIP 50V 470P	1	
C815		ECUX1H390JCN	CHIP 50V 39P	1	
C2001		ECQB1H333JH	MYLAR 50V 0.033U	1	
C2002		ECQB1H333JH	MYLAR 50V 0.033U	1	
C2003		ECQB1H333JH	MYLAR 50V 0.033U	1	
C2004		ECEA1HK2R2	ELECTROLYTIC 50V 2.2U	1	

Ref.No.		Part No.	Part Name & Description			Pcs	Remarks
C2005		ECEA1HK2R2	ELECTROLYTIC	50V	2.2U	1	
C2006		ECEA1HK2R2	ELECTROLYTIC	50V	2.2U	1	
C2007		ECQB1H223JH	MYLAR	50V	0.022U	1	
C2008		ECQV1H104JZ	MYLAR	50V	0.1U	1	
C2009		ECEA1HKN010	ELECTROLYTIC	50V	1U	1	
C2011		ECEA1CK101	ELECTROLYTIC	16V	100U	1	
C2018		ECQV1H104JZ	MYLAR	50V	0.1U	1	
C2019		ECEA1CK470	ELECTROLYTIC	16V	47U	1	
C2021		VCYD1C104MR1	SEMICONDUCTOR	16V	0.1U	1	
C2022		ECUX1H332KBN	CHIP	50V	3300P	1	
C2023		ECUX1H332KBN	CHIP	50V	3300P	1	
C2024		ECUX1H332KBN	CHIP	50V	3300P	1	
C2025		ECEA1EU221	ELECTROLYTIC	25V	220U	1	
C2027		ECQV1H474JZ	MYLAR	50V	0.47U	1	
C3001		ECEA1CK470	ELECTROLYTIC	16V	47U	1	
C3002		ECEA0JU471	ELECTROLYTIC	6.3V	470U	1	
C3003		ECEA1CK100	ELECTROLYTIC	16V	10U	1	
C3004		ECUX1H820JCN	CHIP	50V	82P	1	
C3005		ECUX1H391JN	CHIP	50V	390P	1	
C3006		ECUX1H180JCN	CHIP	50V	18P	1	
C3007		ECEA0JK470	ELECTROLYTIC	6.3V	47U	1	
C3008		ECEA1HK010	ELECTROLYTIC	50V	1U	1	
C3012		ECUX1H180JCN	CHIP	50V	18P	1	
C4001		ECQB1H392JH	MYLAR	50V	3900P	1	
C4002		ECUX1H102KBN	CHIP	50V	1000P	1	
C4003		ECEA1CK330	ELECTROLYTIC	16V	33U	1	
C4004		ECEA1HK010	ELECTROLYTIC	50V	1U	1	
C4005		ECEA1AK220	ELECTROLYTIC	10V	22U	1	
C4006		ECEA1CK100	ELECTROLYTIC	16V	10U	1	
C4007		ECEA50MX1	ELECTROLYTIC	50V	1U	1	
C4008		ECUX1H331KBN	CHIP	50V	330P	1	
C4009		ECUX1H102KBN	CHIP	50V	1000P	1	
C4010		ECQB1H103JH	MYLAR	50V	0.01U	1	
C4011		ECEA16M10	ELECTROLYTIC	16V	10U	1	
C4012		ECEA1HK010	ELECTROLYTIC	50V	1U	1	
C4013		ECEA1AK220	ELECTROLYTIC	10V	22U	1	
C4014		ECEA1CK470	ELECTROLYTIC	16V	47U	1	
C4015		ECEA1CK100	ELECTROLYTIC	16V	10U	1	
C4016		ECEA1CK100	ELECTROLYTIC	16V	10U	1	
C4017		ECQB1H223JH	MYLAR	50V	0.022U	1	
C4018		ECQB1H333JH	MYLAR	50V	0.033U	1	
C4019		ECQB1H273KH	MYLAR	50V	0.027U	1	
C4020		ECEA1CK100	ELECTROLYTIC	16V	10U	1	
C4021		ECUX1H102KBN	CHIP	50V	1000P	1	
C4022		ECQB1H153KH	MYLAR	50V	0.015U	1	
C4023		ECEA1CK470	ELECTROLYTIC	16V	47U	1	
C4024		ECQP1222JZ	MYLAR	100V	2200P	1	
C4025		ECEA1CK470	ELECTROLYTIC	16V	47U	1	
C4026		ECQV1H563JZ	MYLAR	50V	0.056U	1	
C4027		ECQV1H184JZ	MYLAR	50V	0.18U	1	
C6001		ECEA0JK220	ELECTROLYTIC	6.3V	22U	1	
C6007		ECQV1H104JZ	MYLAR	50V	0.1U	1	
C6011		ECUX1E103KBN	CHIP	25V	0.03U	1	
C6012		ECUX1E103KBN	CHIP	25V	0.03U	1	
C6014		ECUX1H221KN	CHIP	50V	220P	1	
C6017		ECEA0JK470	ELECTROLYTIC	6.3V	47U	1	
C6018		ECEA0JK470	ELECTROLYTIC	6.3V	47U	1	
C6019		ECEA0JK470	ELECTROLYTIC	6.3V	47U	1	
C6020		ECUX1E103KBN	CHIP	25V	0.03U	1	
C6022		ECEA0JK330	ELECTROLYTIC	6.3V	33U	1	
C6023		ECKF1H103ZF	CERAMIC	50V	0.01U	1	
C6024		ECEA1CK330	ELECTROLYTIC	16V	33U	1	
C6025		ECUX1H102KBN	CHIP	50V	1000P	1	
C6026		ECEA0JU101	ELECTROLYTIC	6.3V	100U	1	
C6030		ECUX1H271JN	CHIP	50V	270P	1	
C6031		ECUX1H271JN	CHIP	50V	270P	1	
C6032		ECUX1H271JN	CHIP	50V	270P	1	
C6033		ECUX1H222KBN	CHIP	50V	2200P	1	
C6034		ECKF1H222KB	CERAMIC	50V	2200P	1	
C7518		EECF5R5U105	GOLD	5.5V	1	1	
C7551		ECQV1H104JZ	MYLAR	50V	0.1U	1	
C7552		ECEA1HK010	ELECTROLYTIC	50V	1U	1	
C7553		ECEA1CK100	ELECTROLYTIC	16V	10U	1	
C7554		ECEA1VK220	ELECTROLYTIC	35V	22U	1	
C7554		ECEA1VK220	ELECTROLYTIC	35V	22U	1	

Ref.No.		Part No.	Part Name & Description			Pcs	Remarks
C7555		ECQB1H273KH	MYLAR	50V	0.027U	1	
C7556		ECQV1H823JZ	MYLAR	50V	0.082U	1	
C7557		ECQV1H683JZ	MYLAR	50V	0.068U	1	
C7558		ECUX1H103ZFN	CHIP	50V	0.01U	1	
C7559		ECQV1H104JZ	MYLAR	50V	0.1U	1	
C7560		ECUX1H103ZFN	CHIP	50V	0.01U	1	
C7561		ECQV1H104JZ	MYLAR	50V	0.1U	1	
C7563		ECEA1HK010	ELECTROLYTIC	50V	1U	1	
C7564		ECEA1CK220	ELECTROLYTIC	16V	22U	1	
C7565		ECUX1H103ZFN	CHIP	50V	0.01U	1	
C7566		ECUX1H103ZFN	CHIP	50V	0.01U	1	
C7567		ECEA1HKN010	ELECTROLYTIC	50V	1U	1	
C7568		ECUX1H103ZFN	CHIP	50V	0.01U	1	
C7570		ECEA1CK100	ELECTROLYTIC	16V	10U	1	
C8001		ECUX1H103ZFN	CHIP	50V	0.01U	1	
C8002		ECUX1H103ZFN	CHIP	50V	0.01U	1	
			DIODES				
D201		MA165	DIODE			1	
D202		MA165	DIODE			1	
D302		MA221	DIODE			1	
D303		1SS283	DIODE			1	
D304		1SS283	DIODE			1	
D305		1SS283	DIODE			1	
D306		MA221	DIODE			1	
D307		1SS283	DIODE			1	
D308		MA221	DIODE			1	
D309		MA221	DIODE			1	
D710		MA3100L	DIODE			1	
D712		MA27WA	DIODE			1	
D2003		MA165	DIODE			1	
D2004		MA165	DIODE			1	
D2007		MA165	DIODE			1	
D2008		MA165	DIODE			1	
D2009		MA165	DIODE			1	
D3001		MA165	DIODE			1	
D3002		MA165	DIODE			1	
D3003		MA165	DIODE			1	
D3004		11ES1	DIODE			1	
D3101		MA165	DIODE			1	
D6001		11ES1	DIODE			1	
D6002		MA165	DIODE			1	
D6005		MA165	DIODE			1	
D6009		MA165	DIODE			1	
D6010		MA165	DIODE			1	
D6011		MA165	DIODE			1	
D6012		MA165	DIODE			1	
D6017		11ES1	DIODE			1	
D6019		MA4150M	DIODE			1	
D6020		MA4110M	DIODE			1	
D6021		MA165	DIODE			1	
D6022		MA165	DIODE			1	
D6023		MA165	DIODE			1	
D6024		MA165	DIODE			1	
D6028		MA165	DIODE			1	
D6029		MA165	DIODE			1	
D6030		MA165	DIODE			1	
D6031		MA165	DIODE			1	
D7551		MA165	DIODE			1	
D7552		ERA15-01	DIODE			1	
D7553		MA165	DIODE			1	
D7554		LN28WP.VT	LED			1	
D7555		MA27WA	DIODE			1	
			DELAY LINES				
DL301		VLD0077	DELAY LINE			1	
DL801		VLD0072	DELAY LINE			1	
			FILTERS				

Ref.No.		Part No.	Part Name & Description	Pcs	Remarks
FL301		ELB4L021	FILTER	1	
FL801		VLF033O	FILTER	1	
FL802		ELB4K017	FILTER	1	
FL4001		VLF0332R	FILTER	1	
			INTEGRATED CIRCUITS		
IC201		UPD6160CA506	IC	1	
IC202		UPD6161CA501	IC	1	
IC203		UPC358C	IC	1	
IC301		VEFY013	FIC	1	
IC701		M51366SP	IC	1	
IC801		VEFC012	FIC	1	
IC2001		BA6430S	IC	1	
IC4001		BA7752LS	IC	1	
IC6001		MN15362VJE	IC	1	
IC6002		UPC393C	IC	1	
IC6003		UPD4510BC	IC	1	
IC6004		MN1280	IC	1	
IC7551		AN5034	IC	1	
			COILS		
L301		VLQEL05F101K	COIL 100UH	1	
L302		VLQEL05F101K	COIL 100UH	1	
L303		VLQEL05F100K	COIL 10UH	1	
L304		VLQEL05F100K	COIL 10UH	1	
L306		VLQEL05F181K	COIL 180UH	1	
L308		VLQEL05F181K	COIL 180UH	1	
L309		VLQEL05F101K	COIL 100UH	1	
L310		VLQEL05F101K	COIL 100UH	1	
L311		VLQEL05F101K	COIL 100UH	1	
L312		VLQEL05F101K	COIL 100UH	1	
L701		VLQEL05F680K	COIL 68UH	1	
L702		VLQEL05F680K	COIL 68UH	1	
L711		ELQTR56XB	COIL	1	
L712		ELQTR47XB	COIL	1	
L713		ELQTR56XB	COIL	1	
L714		ELQF1R2KB	COIL 1.2UH	1	
L715		VLQ0167	COIL	1	
L717		VLQEL05F680K	COIL 68UH	1	
L718		VLQEL05F680K	COIL 68UH	1	
L719		VLQEL05F150K	COIL 15UH	1	
L781		VLQEL05F680K	COIL 68UH	1	
L801		VLQEL05F47OJ	COIL 47UH	1	
L802		VLQEL05F220K	COIL 22UH	1	
L803		VLQEL05F221K	COIL 220UH	1	
L804		VLQEL05F331K	COIL 330UH	1	
L805		VLQEL05F101K	COIL 100UH	1	
L806		VLQEL05F101K	COIL 100UH	1	
L807		VLQEL05F470K	COIL 47UH	1	
L2001		VLQEL05F102K	COIL 1mH	1	
L3001		VLQEL05F101K	COIL 100UH	1	
L3002		VLQEL05F101K	COIL 100UH	1	
L3003		VLQEL05F181K	COIL 180UH	1	
L3004		VLQEL05F150K	COIL 15UH	1	
L3005		VLQEL05F220K	COIL 22UH	1	
L3006		VLQEL05F1R0K	COIL 1UH	1	
L4001		VLQEL07F682J	COIL 6.8mH	1	
L4002		VLQEL05F101K	COIL 100UH	1	
L7551		VLQEL05F102K	COIL 1mH	1	
L7552		VLQEL05F101K	COIL 100UH	1	
			CONNECTORS		
P501		VJS1235T	CONNECTOR (FEMALE)	1	
P502		VJS1233T	CONNECTOR (FEMALE)	1	
P2001		VJP1232T	CONNECTOR(MALE) 5P	1	
P2002		VJP1932T	CONNECTOR (MALE)	1	
P3001		VJP1235T	CONNECTOR(MALE) 8P	1	
P3002		VJP1232T	CONNECTOR(MALE) 5P	1	
P4001		VJP1233R	CONNECTOR(MALE) 6P	1	

Ref.No.		Part No.	Part Name & Description	Pcs	Remarks
P6001		VJP1239T	CONNECTOR(MALE) 12P	1	
P6002		VJS1935	CONNECTOR (FEMALE)	1	
P6003		VJP1236T	CONNECTOR(MALE) 9P	1	
P6004		VJS1656	CONNECTOR	1	
			PACK PINS		
PK201		VJR0190	PACK PIN	1	
PK202		VJR0189	PACK PIN	1	
PK203		VJR0190	PACK PIN	1	
PK271		VJR0259	PACK PIN	1	
PK301		VJR0130W	PACK PIN	1	
PK302		VJR0160W	PACK PIN	1	
PK303		VJR0163W	PACK PIN	1	
			TRANSISTORS		
Q201		2SC3311	TRANSISTOR	1	
Q202		2SC3311	TRANSISTOR	1	
Q204		2SA1309	TRANSISTOR	1	
Q205		2SA1309	TRANSISTOR	1	
Q206		2SA1309	TRANSISTOR	1	
Q208		2SC3311	TRANSISTOR	1	
Q271		2SC3311	TRANSISTOR	1	
Q272		2SC3311	TRANSISTOR	1	
Q273		2SC3311	TRANSISTOR	1	
Q274		2SC3311	TRANSISTOR	1	
Q302		2SC2295	TRANSISTOR CHIP	1	(B,C)
Q303		2SC2295	TRANSISTOR CHIP	1	(B,C)
Q304		2SC3311	TRANSISTOR	1	
Q305		2SB709	TRANSISTOR CHIP	1	(Q,R,S)
Q306		2SB709	TRANSISTOR CHIP	1	(Q,R,S)
Q307		2SD601	TRANSISTOR CHIP	1	(Q,R,S)
Q309		2SD601	TRANSISTOR CHIP	1	(Q,R,S)
Q310		2SD601	TRANSISTOR CHIP	1	(Q,R,S)
Q703		2SD601	TRANSISTOR CHIP	1	(S)
Q710		2SC2377	TRANSISTOR	1	(C)
Q712		2SD638	TRANSISTOR	1	(Q,R,S)
Q713		2SD1328	TRANSISTOR CHIP	1	(S,T)
Q714		2SD601	TRANSISTOR CHIP	1	(Q,R,S)
Q801		2SB709	TRANSISTOR CHIP	1	(Q,R,S)
Q2001		2SA1309	TRANSISTOR	1	
Q2002		2SC3311	TRANSISTOR	1	
Q3001		2SA1309	TRANSISTOR	1	
Q3002		2SA1309	TRANSISTOR	1	
Q3003		2SC3314	TRANSISTOR	1	(B,C)
Q4001		2SC3311	TRANSISTOR	1	(R)
Q4002		2SD1449	TRANSISTOR	1	
Q4003		2SD1449	TRANSISTOR	1	
Q4004		2SB1036	TRANSISTOR	1	
Q4005		2SC3311	TRANSISTOR	1	
Q4006		2SC3311	TRANSISTOR	1	
Q6006		2SB1030	TRANSISTOR	1	
Q6007		2SA1512	TRANSISTOR	1	
Q6009		2SA1512	TRANSISTOR	1	
Q6016		2SD1275	TRANSISTOR	1	(P,Q,R)
Q6017		2SD893	TRANSISTOR	1	(Q,R,S)
Q6018		2SD592	TRANSISTOR	1	(Q,R,S)
Q6019		2SD1423	TRANSISTOR	1	
Q7551		2SB1030A	TRANSISTOR	1	
Q7552		2SB1030A	TRANSISTOR	1	
Q8001		2SC3311	TRANSISTOR	1	
			COMBINATION PARTS		
			(TRANSISTOR & RESISTOR)		
QR201		UN4113	TRANSISTOR-RESISTOR	1	
QR202		UN4113	TRANSISTOR-RESISTOR	1	
QR301		UN2213	TRANSISTOR-RESISTOR	1	
QR304		DTC114YK	TRANSISTOR-RESISTOR	1	
QR306		UN2213	TRANSISTOR-RESISTOR	1	
QR307		UN2213	TRANSISTOR-RESISTOR	1	

Ref.No.	Part No.	Part Name & Description	Pcs	Remarks
QR701	UN2213	TRANSISTOR-RESISTOR	1	
QR702	UN2213	TRANSISTOR-RESISTOR	1	
QR711	UN2212	TRANSISTOR-RESISTOR	1	
QR712	UN2212	TRANSISTOR-RESISTOR	1	
QR713	UN2211	TRANSISTOR-RESISTOR	1	
QR2003	UN4112	TRANSISTOR-RESISTOR	1	
QR2004	UN4113	TRANSISTOR-RESISTOR	1	
QR2005	UN4213	TRANSISTOR-RESISTOR	1	
QR2006	UN4213	TRANSISTOR-RESISTOR	1	
QR2020	UN4212	TRANSISTOR-RESISTOR	1	
QR2025	UN4112	TRANSISTOR-RESISTOR	1	
QR2026	UN4213	TRANSISTOR-RESISTOR	1	
QR2027	UN4213	TRANSISTOR-RESISTOR	1	
QR2028	UN4213	TRANSISTOR-RESISTOR	1	
QR3001	UN4111	TRANSISTOR-RESISTOR	1	
QR3004	UN4213	TRANSISTOR-RESISTOR	1	
QR6001	UN4212	TRANSISTOR-RESISTOR	1	
QR6004	UN4213	TRANSISTOR-RESISTOR	1	
QR6005	UN4213	TRANSISTOR-RESISTOR	1	
QR6006	UN4111	TRANSISTOR-RESISTOR	1	
QR6008	UN4111	TRANSISTOR-RESISTOR	1	
QR6011	UN4212	TRANSISTOR-RESISTOR	1	
QR6012	UN4113	TRANSISTOR-RESISTOR	1	
QR6013	UN4213	TRANSISTOR-RESISTOR	1	
QR6014	UN4213	TRANSISTOR-RESISTOR	1	
QR6016	UN4213	TRANSISTOR-RESISTOR	1	
		RESISTORS		
R201	ERJ6GMYJ393	CHIP 1/16W 39K	1	
R202	ERJ6GMYJ152	CHIP 1/16W 1.5K	1	
R203	ERJ6GMYJ103	CHIP 1/16W 10K	1	
R204	ERJ6GMYJ221	CHIP 1/16W 220	1	
R205	ERJ6GMYJ102	CHIP 1/16W 1K	1	
R206	ERJ6GMYJ392	CHIP 1/16W 3.9K	1	
R207	ERJ6GMYJ473	CHIP 1/16W 47K	1	
R208	ERJ6GMYJ222	CHIP 1/16W 2.2K	1	
R209	ERJ6GMYJ123	CHIP 1/16W 12K	1	
R210	ERJ6GMYJ274	CHIP 1/16W 270K	1	
R211	ERJ6GMYJ563	CHIP 1/16W 56K	1	
R212	ERJ6GMYJ154	CHIP 1/16W 150K	1	
R213	ERJ6GMYJ154	CHIP 1/16W 150K	1	
R214	ERJ6GMYJ105	CHIP 1/16W 1M	1	
R215	ERJ6GMYJ472	CHIP 1/16W 4.7K	1	
R216	ERJ6GMYJ103	CHIP 1/16W 10K	1	
R217	ERJ6GMYJ683	CHIP 1/16W 68K	1	
R218	ERJ6GMYJ333	CHIP 1/16W 33K	1	
R219	ERJ6GMYJ333	CHIP 1/16W 33K	1	
R220	ERJ6GMYJ823	CHIP 1/16W 82K	1	
R221	ERJ6GMYJ823	CHIP 1/16W 82K	1	
R222	ERJ6GMYJ332	CHIP 1/16W 3.3K	1	
R223	ERJ6GMYJ332	CHIP 1/16W 3.3K	1	
R224	ERJ6GMYJ561	CHIP 1/16W 560	1	
R225	ERJ6GMYJ222	CHIP 1/16W 2.2K	1	
R226	ERJ6GMYJ102	CHIP 1/16W 1K	1	
R227	ERJ6GMYJ103	CHIP 1/16W 10K	1	
R228	ERJ6GMYJ393	CHIP 1/16W 39K	1	
R229	ERJ6GMYJ221	CHIP 1/16W 220	1	
R230	ERJ6GMYJ152	CHIP 1/16W 1.5K	1	
R231	ERJ6GMYJ152	CHIP 1/16W 1.5K	1	
R232	ERJ6GMYJ563	CHIP 1/16W 56K	1	
R233	ERJ6GMYJ563	CHIP 1/16W 56K	1	
R234	ERJ6GMYJ183	CHIP 1/16W 18K	1	
R235	ERJ6GMYJ333	CHIP 1/16W 33K	1	
R236	ERJ6GMYJ154	CHIP 1/16W 150K	1	
R237	ERJ6GMYJ154	CHIP 1/16W 150K	1	
R238	ERJ6GMYJ124	CHIP 1/16W 120K	1	
R239	ERJ6GMYJ222	CHIP 1/16W 2.2K	1	
R240	ERJ6GMYJ333	CHIP 1/16W 33K	1	
R241	ERJ6GMYJ684	CHIP 1/16W 680K	1	
R242	ERJ6GMYJ124	CHIP 1/16W 120K	1	
R243	ERJ6GMYJ102	CHIP 1/16W 1K	1	
R244	ERJ6GMYJ223	CHIP 1/16W 22K	1	
R245	ERJ6GMYJ223	CHIP 1/16W 22K	1	

Ref.No.	Part No.	Part Name & Description	Pcs	Remarks
R246	ERJ6GMYJ103	CHIP 1/16W 10K	1	
R247	ERJ6GMYJ103	CHIP 1/16W 10K	1	
R248	ERJ6GMYJ223	CHIP 1/16W 22K	1	
R250	ERJ6GMYJ821	CHIP 1/16W 820	1	
R253	ERDS2TJ564	CARBON 1/4W 560K	1	
R257	ERJ6GMYJ562	CHIP 1/16W 5.6K	1	
R258	ERJ6GMYJ683	CHIP 1/16W 68K	1	
R259	ERJ6GMYJ223	CHIP 1/16W 22K	1	
R260	ERJ6GMYJ223	CHIP 1/16W 22K	1	
R262	ERJ6GMYJ332	CHIP 1/16W 3.3K	1	
R271	ERJ6GMYJ222	CHIP 1/16W 2.2K	1	
R272	ERJ6GMYJ154	CHIP 1/16W 150K	1	
R273	ERJ6GMYJ153	CHIP 1/16W 15K	1	
R274	ERJ6GMYJ154	CHIP 1/16W 150K	1	
R275	ERJ6GMYJ102	CHIP 1/16W 1K	1	
R276	ERJ6GMYJ273	CHIP 1/16W 27K	1	
R277	ERJ6GMYJ681	CHIP 1/16W 680	1	
R278	ERJ6GMYJ104	CHIP 1/16W 100K	1	
R279	ERJ6GMYJ683	CHIP 1/16W 68K	1	
R301	ERJ6GMYJ393	CHIP 1/16W 39K	1	
R302	ERJ6GMYJ681	CHIP 1/16W 680	1	
R304	ERJ6GMYJ223	CHIP 1/16W 22K	1	
R305	ERJ6GMYJ223	CHIP 1/16W 22K	1	
R306	ERJ6GMYJ473	CHIP 1/16W 47K	1	
R307	ERJ6GMYJ153	CHIP 1/16W 15K	1	
R308	ERJ6GMYJ473	CHIP 1/16W 47K	1	
R309	ERJ6GMYJ473	CHIP 1/16W 47K	1	
R310	ERDS2TJ272	CARBON 1/4W 2.7K	1	
R311	ERJ6GMYJ821	CHIP 1/16W 820	1	
R312	ERDS2TJ472	CARBON 1/4W 4.7K	1	
R313	ERJ6GMYJ682	CHIP 1/16W 6.8K	1	
R314	ERJ6GMYJ182	CHIP 1/16W 1.8K	1	
R315	ERJ6GMYJ102	CHIP 1/16W 1K	1	
R316	EROS2CKG2702	METAL OXIDE 1/4W 27K	1	
R317	ERJ6GMYG822	CHIP 1/16W 8.2K	1	
R318	ERDS2TJ272	CARBON 1/4W 2.7K	1	
R319	ERJ6GMYJ681	CHIP 1/16W 680	1	
R320	ERJ6GMYJ102	CHIP 1/16W 1K	1	
R321	ERJ6GMYJ182	CHIP 1/16W 1.8K	1	
R322	ERJ6GMYJ680	CHIP 1/16W 68	1	
R323	ERJ6GMYJ823	CHIP 1/16W 82K	1	
R324	ERJ6GMYJ102	CHIP 1/16W 1K	1	
R325	ERJ6GMYJ221	CHIP 1/16W 220	1	
R326	ERJ6GMYJ223	CHIP 1/16W 22K	1	
R327	ERJ6GMYJ272	CHIP 1/16W 2.7K	1	
R329	ERJ6GMYJ153	CHIP 1/16W 15K	1	
R330	ERJ6GMYJ182	CHIP 1/16W 1.8K	1	
R333	ERJ6GMYJ223	CHIP 1/16W 22K	1	
R334	ERJ6GMYJ223	CHIP 1/16W 22K	1	
R336	ERJ6GMYJ274	CHIP 1/16W 270K	1	
R337	ERJ6GMYJ684	CHIP 1/16W 680K	1	
R338	ERJ6GMYJ103	CHIP 1/16W 10K	1	
R340	ERJ6GMYJ223	CHIP 1/16W 22K	1	
R341	ERJ6GMYJ273	CHIP 1/16W 27K	1	
R707	ERJ6GMYJ103	CHIP 1/16W 10K	1	
R712	ERJ6GMYJ682	CHIP 1/16W 6.8K	1	
R713	ERJ6GMYJ681	CHIP 1/16W 680	1	
R714	ERD2FCG330	CARBON 2W 33	1	<!>
R715	ERJ6GMYJ271	CHIP 1/16W 270	1	
R716	ERJ6GMYJ272	CHIP 1/16W 2.7K	1	
R717	ERJ6GMYJ332	CHIP 1/16W 3.3K	1	
R718	ERJ6GMYJ754	CHIP 1/16W 750K	1	
R719	ERJ6GMYJ682	CHIP 1/16W 6.8K	1	
R720	ERJ6GMYJ822	CHIP 1/16W 8.2K	1	
R721	ERJ6GMYJ272	CHIP 1/16W 2.7K	1	
R722	ERJ6GMYJ332	CHIP 1/16W 3.3K	1	
R723	ERJ6GMYJ183	CHIP 1/16W 18K	1	
R724	ERJ6GMYJ101	CHIP 1/16W 100	1	
R725	ERJ6GMYJ182	CHIP 1/16W 1.8K	1	
R726	ERDS2TJ472	CARBON 1/4W 4.7K	1	
R727	ERJ6GMYJ471	CHIP 1/16W 470	1	
R728	ERDS2TJ471	CARBON 1/4W 470	1	
R729	ERJ6GMYJ331	CHIP 1/16W 330	1	
R730	ERJ6GMYJ331	CHIP 1/16W 330	1	
R737	ERJ6GMYJ394	CHIP 1/16W 390K	1	

Ref.No.		Part No.	Part Name & Description		Pcs	Remarks
R738		ERJ6GMYJ274	CHIP	1/16W 270K	1	
R739		ERDS2TJ681	CARBON	1/4W 680	1	
R740		ERJ6GMYJ473	CHIP	1/16W 47K	1	
R741		ERJ6GMYJ272	CHIP	1/16W 2.7K	1	
R742		ERJ6GMYJ272	CHIP	1/16W 2.7K	1	
R743		ERDS2TJ470	CARBON	1/4W 47	1	
R744		ERJ6GMYJ821	CHIP	1/16W 820	1	
R745		ERJ6GMYJ331	CHIP	1/16W 330	1	
R746		ERDS2TJ151	CARBON	1/4W 150	1	
R750		ERJ6GMYJ182	CHIP	1/16W 1.8K	1	
R757		ERJ6GMYJ222	CHIP	1/16W 2.2K	1	
R759		ERDS2TJ103	CARBON	1/4W 10K	1	
R760		ERJ6GMYJ102	CHIP	1/16W 1K	1	
R763		ERJ6GMYJ103	CHIP	1/16W 10K	1	
R764		ERJ6GMYJ822	CHIP	1/16W 8.2K	1	
R781		ERJ6GMYJ271	CHIP	1/16W 270	1	
R782		ERJ6GMYJ391	CHIP	1/16W 390	1	
R792		ERJ6GMYJ120	CHIP	1/16W 12	1	
R801		ERJ6GMYJ122	CHIP	1/16W 1.2K	1	
R802		ERJ6GMYJ271	CHIP	1/16W 270	1	
R803		ERJ6GMYJ273	CHIP	1/16W 27K	1	
R804		ERJ6GMYJ821	CHIP	1/16W 820	1	
R805		ERJ8GCYJ470	CHIP	1/8W 47	1	
R806		ERJ6GMYJ102	CHIP	1/16W 1K	1	
R807		ERJ6GMYJ122	CHIP	1/16W 1.2K	1	
R808		ERJ6GMYJ182	CHIP	1/16W 1.8K	1	
R809		ERJ6GMYJ222	CHIP	1/16W 2.2K	1	
R810		ERJ6GMYJ102	CHIP	1/16W 1K	1	
R811		ERJ6GMYJ471	CHIP	1/16W 470	1	
R812		ERJ6GMYJ473	CHIP	1/16W 47K	1	
R813		ERJ6GMYJ473	CHIP	1/16W 47K	1	
R814		ERJ6GMYJ102	CHIP	1/16W 1K	1	
R2004		ERX12SJ1R0	METAL OXIDE	1/2W 1	1	
R2005		ERJ6GMYJ102	CHIP	1/16W 1K	1	
R2006		ERJ6GMYG562	CHIP	1/16W 5.6K	1	
R2007		ERJ6GMYJ472	CHIP	1/16W 4.7K	1	
R2008		ERJ6GMYJ682	CHIP	1/16W 6.8K	1	
R2009		ERJ6GMYJ562	CHIP	1/16W 5.6K	1	
R2010		ERJ6GMYJ223	CHIP	1/16W 22K	1	
R2011		ERJ6GMYJ223	CHIP	1/16W 22K	1	
R2012		ERJ6GMYJ103	CHIP	1/16W 10K	1	
R2013		ERJ6GMYJ333	CHIP	1/16W 33K	1	
R2014		ERJ6GMYJ222	CHIP	1/16W 2.2K	1	
R2015		ERJ6GMYJ102	CHIP	1/16W 1K	1	
R2016		ERJ6GMYJ103	CHIP	1/16W 10K	1	
R2017		ERDS2TJ332	CARBON	1/4W 3.3K	1	
R2018		ERDS2TJ330	CARBON	1/4W 33	1	
R2019		ERJ6GMYJ102	CHIP	1/16W 1K	1	
R2020		ERJ6GMYJ104	CHIP	1/16W 100K	1	
R2021		ERJ6GMYJ272	CHIP	1/16W 2.7K	1	
R2022		ERJ6GMYJ222	CHIP	1/16W 2.2K	1	
R2029		ERJ6GMYJ683	CHIP	1/16W 68K	1	
R2030		ERJ6GMYJ333	CHIP	1/16W 33K	1	
R2031		ERJ6GMYJ473	CHIP	1/16W 47K	1	
R2032		ERJ6GMYJ124	CHIP	1/16W 120K	1	
R2033		ERJ6GMYJ683	CHIP	1/16W 68K	1	
R2034		ERJ6GMYJ391	CHIP	1/16W 390	1	
R2036		ERJ6GMYJ124	CHIP	1/16W 120K	1	
R2037		ERDS2TJ330	CARBON	1/4W 33	1	
R2038		ERDS2TJ330	CARBON	1/4W 33	1	
R2039		ERDS2TJ330	CARBON	1/4W 33	1	
R2040		ERJ6GMYJ103	CHIP	1/16W 10K	1	
R3001		ERDS2TJ471	CARBON	1/4W 470	1	
R3002		ERJ6GMYJ750	CHIP	1/16W 75	1	
R3003		ERJ6GMYJ471	CHIP	1/16W 470	1	
R3004		ERJ6GMYJ224	CHIP	1/16W 220K	1	
R3005		ERJ6GMYJ272	CHIP	1/16W 2.7K	1	
R3006		ERJ6GMYJ471	CHIP	1/16W 470	1	
R3007		ERJ6GMYJ223	CHIP	1/16W 22K	1	
R3008		ERJ6GMYJ102	CHIP	1/16W 1K	1	
R3009		ERJ6GMYJ102	CHIP	1/16W 1K	1	
R3010		ERJ6GMYJ221	CHIP	1/16W 220	1	
R3011		ERJ6GMYJ561	CHIP	1/16W 560	1	
R3013		ERJ6GMYJ750	CHIP	1/16W 75	1	
R3018		ERJ6GMYJ750	CHIP	1/16W 75	1	

Ref.No.		Part No.	Part Name & Description		Pcs	Remarks
R3019		ERJ6GMYJ123	CHIP	1/16W 12K	1	
R3022		ERJ6GMYJ103	CHIP	1/16W 10K	1	
R3023		ERJ6GMYJ750	CHIP	1/16W 75	1	
R3024		ERJ6GMYJ750	CHIP	1/16W 75	1	
R4001		ERJ6GMYJ100	CHIP	1/16W 10	1	
R4002		ERJ6GMYJ152	CHIP	1/16W 1.5K	1	
R4003		ERJ6GMYJ272	CHIP	1/16W 2.7K	1	
R4004		ERJ6GMYJ183	CHIP	1/16W 18K	1	
R4005		ERJ6GMYJ222	CHIP	1/16W 2.2K	1	
R4006		ERJ6GMYJ223	CHIP	1/16W 22K	1	
R4007		ERJ6GMYJ333	CHIP	1/16W 33K	1	
R4008		ERJ6GMYJ562	CHIP	1/16W 5.6K	1	
R4009		ERJ6GMYJ562	CHIP	1/16W 5.6K	1	
R4010		ERJ6GMYJ473	CHIP	1/16W 47K	1	
R4011		ERJ6GMYJ334	CHIP	1/16W 330K	1	
R4012		ERJ6GMYJ331	CHIP	1/16W 330	1	
R4013		ERJ6GMYJ822	CHIP	1/16W 8.2K	1	
R4014		ERJ6GMYJ272	CHIP	1/16W 2.7K	1	
R4015		ERJ6GMYJ105	CHIP	1/16W 1M	1	
R4016		ERJ6GMYJ562	CHIP	1/16W 5.6K	1	
R4017		ERDS2TJ223	CARBON	1/4W 22K	1	
R4018		ERDS2TJ821	CARBON	1/4W 820	1	
R4019		ERJ6GMYJ392	CHIP	1/16W 3.9K	1	
R4020		ERJ6GMYJ223	CHIP	1/16W 22K	1	
R4021		ERJ6GMYJ470	CHIP	1/16W 47	1	
R4022		ERJ6GMYJ123	CHIP	1/16W 12K	1	
R4023		ERJ6GMYJ153	CHIP	1/16W 15K	1	
R4024		ERJ6GMYJ561	CHIP	1/16W 560	1	
R4025		ERJ6GMYJ221	CHIP	1/16W 220	1	
R4026		ERJ6GMYJ101	CHIP	1/16W 100	1	
R4027		ERJ6GMYJ561	CHIP	1/16W 560	1	
R4028		ERJ6GMYJ103	CHIP	1/16W 10K	1	
R4029		ERJ6GMYJ223	CHIP	1/16W 22K	1	
R4030		ERJ6GMYJ122	CHIP	1/16W 1.2K	1	
R4031		ERJ6GMYJ472	CHIP	1/16W 4.7K	1	
R4032		ERJ6GMYJ563	CHIP	1/16W 56K	1	
R4033		ERJ6GMYJ563	CHIP	1/16W 56K	1	
R4034		ERJ6GMYJ273	CHIP	1/16W 27K	1	
R4035		ERJ6GMYJ561	CHIP	1/16W 560	1	
R4036		ERJ6GMYJ472	CHIP	1/16W 4.7K	1	
R6001		ERDS1TJ470	CARBON	1/2W 47	1	
R6006		ERD2FCVG220	CARBON	2W 22	1	<!>
R6007		ERJ6GMYJ122	CHIP	1/16W 1.2K	1	
R6008		ERJ6GMYJ181	CHIP	1/16W 180	1	
R6009		ERJ6GMYJ561	CHIP	1/16W 560	1	
R6010		ERJ6GMYJ102	CHIP	1/16W 1K	1	
R6011		ERJ6GMYJ221	CHIP	1/16W 220	1	
R6016		ERJ6GMYJ223	CHIP	1/16W 22K	1	
R6019		ERJ6GMYJ153	CHIP	1/16W 15K	1	
R6022		ERJ6GMYJ223	CHIP	1/16W 22K	1	
R6023		ERJ6GMYJ683	CHIP	1/16W 68K	1	
R6024		ERJ6GMYJ223	CHIP	1/16W 22K	1	
R6025		ERJ6GMYJ824	CHIP	1/16W 820K	1	
R6026		ERJ6GMYJ105	CHIP	1/16W 1M	1	
R6027		ERJ6GMYJ223	CHIP	1/16W 22K	1	
R6028		ERJ6GMYJ184	CHIP	1/16W 180K	1	
R6029		ERJ6GMYJ561	CHIP	1/16W 560	1	
R6030		ERJ6GMYJ153	CHIP	1/16W 15K	1	
R6031		ERJ6GMYJ153	CHIP	1/16W 15K	1	
R6032		ERJ6GMYJ332	CHIP	1/16W 3.3K	1	
R6033		ERJ6GMYJ333	CHIP	1/16W 33K	1	
R6034		ERJ6GMYJ333	CHIP	1/16W 33K	1	
R6035		ERJ6GMYJ101	CHIP	1/16W 100	1	
R6036		ERJ6GMYJ101	CHIP	1/16W 100	1	
R6037		ERJ6GMYJ101	CHIP	1/16W 100	1	
R6038		ERJ6GMYJ272	CHIP	1/16W 2.7K	1	
R6041		ERJ6GMYJ391	CHIP	1/16W 390	1	
R6045		ERDS2TJ562	CARBON	1/4W 5.6K	1	
R6046		ERDS2TJ152	CARBON	1/4W 1.5K	1	
R6050		ERJ6GMYJ562	CHIP	1/16W 5.6K	1	
R6051		ERJ6GMYJ332	CHIP	1/16W 3.3K	1	
R6068		ERDS2TJ332	CARBON	1/4W 3.3K	1	
R6069		ERJ6GMYJ103	CHIP	1/16W 10K	1	
R6070		ERJ6GMYJ471	CHIP	1/16W 470	1	
R6071		ERJ6GMYJ152	CHIP	1/16W 1.5K	1	

Ref.No.		Part No.	Part Name & Description	Pcs	Remarks
R6072		ERJ6GMYJ562	CHIP 1/16W 5.6K	1	
R6073		ERJ6GMYJ391	CHIP 1/16W 390	1	
R6074		ERJ6GMYJ561	CHIP 1/16W 560	1	
R6075		ERG2SJ180	METAL OXIDE 2W 18	1	
R6079		ERJ6GMYJ103	CHIP 1/16W 10K	1	
R6080		ERJ6GMYJ272	CHIP 1/16W 2.7K	1	
R6081		ERJ6GMYJ103	CHIP 1/16W 10K	1	
R6083		ERJ6GMYJ104	CHIP 1/16W 100K	1	
R6085		ERJ6GMYJ101	CHIP 1/16W 100	1	
R6087		ERJ6GMYJ103	CHIP 1/16W 10K	1	
R6088		ERJ6GMYJ223	CHIP 1/16W 22K	1	
R6089		ERJ6GMYJ473	CHIP 1/16W 47K	1	
R6090		ERJ6GMYJ104	CHIP 1/16W 100K	1	
R6091		ERJ6GMYJ473	CHIP 1/16W 47K	1	
R6093		ERDS2TJ103	CARBON 1/4W 10K	1	
R6095		ERJ6GMYJ272	CHIP 1/16W 2.7K	1	
R6096		ERJ6GMYJ272	CHIP 1/16W 2.7K	1	
R6097		ERJ6GMYJ272	CHIP 1/16W 2.7K	1	
R7518		ERJ6GMYJ181	CHIP 1/16W 180	1	
R7551		ERJ6GMYJ104	CHIP 1/16W 100K	1	
R7552		ERJ6GMYJ332	CHIP 1/16W 3.3K	1	
R7553		ERJ6GMYJ332	CHIP 1/16W 3.3K	1	
R7554		ERJ6GMYJ102	CHIP 1/16W 1K	1	
R7555		ERJ6GMYJ102	CHIP 1/16W 1K	1	
R7556		ERJ6GMYJ473	CHIP 1/16W 47K	1	
R7557		ERJ6GMYJ124	CHIP 1/16W 120K	1	
R7558		ERJ6GMYJ104	CHIP 1/16W 100K	1	
R7559		ERJ6GMYJ473	CHIP 1/16W 47K	1	
R7560		ERJ6GMYJ473	CHIP 1/16W 47K	1	
R7561		ERJ6GMYJ223	CHIP 1/16W 22K	1	
R7562		ERJ6GMYJ332	CHIP 1/16W 3.3K	1	
R7564		ERJ6GMYJ332	CHIP 1/16W 3.3K	1	
R7565		ERJ6GMYJ102	CHIP 1/16W 1K	1	
R7568		ERJ6GMYJ103	CHIP 1/16W 10K	1	
R7572		ERJ6GMYJ473	CHIP 1/16W 47K	1	
R7573		ERJ6GMYJ820	CHIP 1/16W 82	1	
R7574		ERDS2TJ333	CARBON 1/4W 33K	1	
R7575		ERDS2TJ273	CARBON 1/4W 27K	1	
R7576		ERDS2TJ390	CARBON 1/4W 39	1	
R7586		ERJ6GMYJ222	CHIP 1/16W 2.2K	1	
R7587		ERJ6GMYJ102	CHIP 1/16W 1K	1	
R8001		ERJ6GMYJ102	CHIP 1/16W 1K	1	
R8002		ERJ6GMYJ181	CHIP 1/16W 180	1	
R8003		ERJ6GMYJ821	CHIP 1/16W 820	1	
			TRANSFORMERS		
T703		EIV5ECC015A	TRANSFORMER	1	
T704		EIV5ECC014A	TRANSFORMER	1	
T711		EIS5ECC003A	TRANSFORMER	1	
T4001		EIQ7QFC01B	IF TRANSFORMER	1	
			VARIABLE RESISTORS		
VR301		EVN60AA00B52	VARIABLE 500	1	
VR701		EVNE4AA00B23	VARIABLE 2K	1	
VR702		EVNE4AA00B23	VARIABLE 2K	1	
VR741		EVN38CA00B14	VARIABLE 10K	1	
VR751		EVN38CA00B53	VARIABLE 5K	1	
VR2001		EVND3AA00B54	VARIABLE 50K	1	
VR2002		EVND3AA00B54	VARIABLE 50K	1	
VR2006		EVND3AA00B54	VARIABLE 50K	1	
VR2010		EVL51MA00B25	VARIABLE 200K	1	
VR2011		EVND3AA00B15	VARIABLE 100K	1	
VR2013		EVN38CA00B23	VARIABLE 2K	1	
VR4001		EVND3AA00B14	VARIABLE 10K	1	
VR4002		EVND3AA00B25	VARIABLE 200K	1	
VR7502		EVND3AA00B14	VARIABLE 10K	1	
			CRYSTAL OSCILLATORS		
X710		EFCH45MSP1	CRYSTAL OSCILLATOR	1	

Ref.No.		Part No.	Part Name & Description	Pcs	Remarks
X711		EFCS4R5MW5A	FILTER	1	
X712		EFCS4R5MS5	FILTER	1	
X801		VSX0160	CRYSTAL OSCILLATOR	1	
X6001		EFOFC3584A5	CRYSTAL OSCILLATOR	1	
			MISCELLANEOUS		
		VEJ0565	INPUT/OUTPUT JACK BOARD	1	
		VJF0004	WIRE SADLE	1	
		VJF0330	PURSE LOCK	1	
		VKC0280	HINGE CLIP	1	
		VMC0075	HEATSINK SPRING	1	FOR IC2001
		VSC1068	HEATSINK	1	FOR Q6016
		VSC1689	HEATSINK	1	FOR IC2001
		VWJ0261	FLEXIBLE WIRE (8PIN)	1	(P6004-P7501)
		VWJ05DW200MM	FLEXIBLE WIRE (5PIN)	1	(P1503-P6002)
		VSC1789	SHIELD CASE (MAIN)	1	(TV DEMODULATOR PACK)
		VSC1788	SHIELD CASE (TOP)	1	(TV DEMODULATOR PACK)
	■	VEP07401A	TIMER C.B.A.		NV-G20PX,NV-G19MX
		VEP07401C			NV-G20PN
			CAPACITORS		
C7501		ECUX1H080DCN	CHIP 50V 8P	1	
C7502		ECRHA030E41	TRIMER 30P	1	
C7503		ECEA1HKR22	ELECTROLYTIC 50V 0.22U	1	
C7504		ECUX1H220JCN	CHIP 50V 22P	1	
C7505		ECUX1H330JCN	CHIP 50V 33P	1	
C7510		ECEA1HKS100	ELECTROLYTIC 50V 10U	1	
C7511		ECEA0JK221	ELECTROLYTIC 6.3V 220U	1	
C7512		ECUX1H103ZFN	CHIP 50V 0.01U	1	
C7514		ECUX1H103ZFN	CHIP 50V 0.01U	1	
			DIODES		
D7501		11ES1	DIODE	1	
D7502		MA4075	DIODE	1	
D7522		MA165	DIODE	1	
D7524		MA165	DIODE	1	
D7531		MA165	DIODE	1	
D7534		MA165	DIODE	1	
D7535		MA165	DIODE	1	
D7536		MA165	DIODE	1	
D7537		MA165	DIODE	1	
D7538		MA165	DIODE	1	
D7539		MA165	DIODE	1	
D7540		MA165	DIODE	1	
D7541		MA165	DIODE	1	
D7542		MA165	DIODE	1	
			DISPLAY TUBE		
DP7501		VSL0102	DISPLAY TUBE	1	
			INTEGRATED CIRCUITS		
IC7501		MN15283VJZ	IC	1	
IC7502		MN1220	IC	1	
IC7504		MN1280P	IC	1	
			CONNECTORS		
P7501		VJS1678	CONNECTOR(FEMALE)	1	
P7503		VJS1729	CONNECTOR(FEMALE)	1	

Ref.No.		Part No.	Part Name & Description	Pcs	Remarks
			TRANSISTOR		
Q7501		2SD637	TRANSISTOR	1	(Q,R,S)
			COMBINATION PARTS		
			(TRANSISTOR & RESISTOR)		
QR7503		UN1112	TRANSISTOR-RESISTOR	1	
			RESISTORS		
R7501		ERJ6GMYJ122	CHIP 1/16W 1.2K	1	
R7502		ERJ6GMYJ224	CHIP 1/16W 220K	1	
R7503		ERJ6GMYJ473	CHIP 1/16W 47K	1	
R7504		ERJ6GMYJ473	CHIP 1/16W 47K	1	
R7507		ERJ6GMYJ104	CHIP 1/16W 100K	1	
R7508		ERJ6GMYJ470	CHIP 1/16W 47	1	
R7509		ERJ6GMYJ102	CHIP 1/16W 1K	1	
R7510		ERJ6GMYJ223	CHIP 1/16W 22K	1	
R7511		ERJ6GMYJ473	CHIP 1/16W 47K	1	
R7527		ERJ6GMYJ103	CHIP 1/16W 10K	1	
R7528		ERJ6GMYJ103	CHIP 1/16W 10K	1	
R7529		ERJ6GMYJ103	CHIP 1/16W 10K	1	
R7535		ERJ6GMYJ102	CHIP 1/16W 1K	1	
			SWITCHES		
SW7501		EVQQS307K	SWITCH	1	
SW7502		EVQQS307K	SWITCH	1	
SW7503		EVQQS307K	SWITCH	1	
SW7504		EVQQS307K	SWITCH	1	
SW7505		EVQQS307K	SWITCH	1	
SW7506		EVQQS307K	SWITCH	1	
SW7507		EVQQS307K	SWITCH	1	
SW7508		EVQQS307K	SWITCH	1	
SW7509		EVQQS307K	SWITCH	1	
SW7510		EVQQS307K	SWITCH	1	
SW7511		EVQQS307K	SWITCH	1	
SW7512		EVQQS307K	SWITCH	1	
SW7513		EVQQS307K	SWITCH	1	
SW7514		EVQQS307K	SWITCH	1	
SW7515		EVQQS307K	SWITCH	1	
SW7516		EVQQS307K	SWITCH	1	
SW7517		EVQQS307K	SWITCH	1	
SW7518		EVQQS307K	SWITCH	1	
SW7519		EVQQS307K	SWITCH	1	
SW7520		EVQQS307K	SWITCH	1	
SW7521		EVQQS307K	SWITCH	1	
SW7522		EVQQS307K	SWITCH	1	
SW7523		EVQQS307K	SWITCH	1	
SW7524		EVQQS307K	SWITCH	1	
SW7525		EVQQS307K	SWITCH	1	
SW7526		EVQQS307K	SWITCH	1	
SW7527		EVQQS307K	SWITCH	1	
			CRYSTAL OSCILLATORS		
X7501		VSX0140	CRYSTAL OSCILLATOR	1	
X7502		VSX0094	CRYSTAL OSCILLATOR	1	
			MISCELLANEOUS		
		VJF0398	FIP HOLDER	1	

Ref.No.		Part No.	Part Name & Description	Pcs	Remarks
	■	VEP06411B	OPERATION C.B.A.		
			CAPACITORS		
C6203		ECEA0JK470	ELECTROLYTIC 6.3V 47U	1	
C6701		ECEA0JK470	ELECTROLYTIC 6.3V 47U	1	
C6702		ECKF1H102KB	CERAMIC 50V 1000P	1	
C6703		ECEA1HK010	ELECTROLYTIC 50V 1U	1	
C6704		ECEA1HK3R3	ELECTROLYTIC 50V 3.3U	1	
			DIODES		
D6201		LN28RCPP	LED	1	
D6202		LN38GCPPSVT	LED	1	
D6203		MA165	DIODE	1	
D6701		PN323B	PHOTO DIODE	1	
			INTEGRATED CIRCUIT		
IC6701		UPC1490HA	IC	1	
			COIL		
L6201		VLQEL05F221K	COIL 220UH	1	
			CONNECTORS		
P6201		VJP1249T	CONNECTOR(MALE) 9P	1	
P6202		VJS1991	CONNECTOR	1	
			RESISTORS		
R6201		ERJ6GMYJ471	CHIP 1/16W 470	1	
R6202		ERJ6GMYJ181	CHIP 1/16W 180	1	
R6204		ERJ6GMYJ472	CHIP 1/16W 4.7K	1	
R6205		ERJ6GMYJ682	CHIP 1/16W 6.8K	1	
R6206		ERJ6GMYJ223	CHIP 1/16W 22K	1	
R6701		ERDS2TJ753	CARBON 1/4W 75K	1	
R6702		ERDS2TJ100	CARBON 1/4W 10	1	
			SWITCHES		
SW6201		EVQQS307K	SWITCH	1	
SW6202		EVQQS307K	SWITCH	1	
SW6204		VSS0187	SWITCH	1	
			VARIABLE RESISTORS		
VR2007		EVUFSAE04B15	VARIABLE 100K	1	
VR2008		EVUFSAE04B15	VARIABLE 100K	1	
VR3004		EVUFRAE04B24	VARIABLE 20K	1	
VR6701		EVMLGGA00B54	VARIABLE 50K	1	
			MISCELLANEOUS		
		VGU3364	SWITCH KNOB	1	
		VMD0504	LED HOLDER	2	
	■	VEP05097H	HEAD AMP PACK C.B.A.		

Ref.No.		Part No.	Part Name & Description	Pcs	Remarks
			CAPACITORS		
C501		ECUX1H103ZFN	CHIP 50V 0.01U	1	
C502		ECUX1H560JCN	CHIP 50V 56P	1	
C503		ECUX1H331KBN	CHIP 50V 330P	1	
C504		ECUX1H560JCN	CHIP 50V 56P	1	
C505		ECUX1H103ZFN	CHIP 50V 0.01U	1	
C506		ECUX1E473ZFN	CHIP 25V 0.047U	1	
C507		ECEA1CK100	ELECTROLYTIC 16V 10U	1	
C508		ECUX1H151JCN	CHIP 50V 150P	1	
C509		ECUX1H103ZFN	CHIP 50V 0.01U	1	
C510		ECUX1H103ZFN	CHIP 50V 0.01U	1	
C511		ECUX1H103ZFN	CHIP 50V 0.01U	1	
C512		ECUX1H390JCN	CHIP 50V 39P	1	
C513		ECEA0JK220	ELECTROLYTIC 6.3V 22U	1	
C514		VCYD1C104MR1	SEMICONDUCTOR 16V 0.1U	1	
C515		ECUX1H102KBN	CHIP 50V 1000P	1	
C516		ECUX1H560JCN	CHIP 50V 56P	1	
C517		ECUX1H103ZFN	CHIP 50V 0.01U	1	
C518		ECEA1CK100	ELECTROLYTIC 16V 10U	1	
C519		ECEA1CK100	ELECTROLYTIC 16V 10U	1	
C520		ECUX1H220JCN	CHIP 50V 22P	1	
C521		ECUX1H103ZFN	CHIP 50V 0.01U	1	
C522		ECUX1H103ZFN	CHIP 50V 0.01U	1	
C523		ECUX1H220JCN	CHIP 50V 22P	1	
C524		ECEA1CK100	ELECTROLYTIC 16V 10U	1	
C525		ECUX1H102KBN	CHIP 50V 1000P	1	
C526		ECUX1H103ZFN	CHIP 50V 0.01U	1	
C527		ECUX1H102KBN	CHIP 50V 1000P	1	
C528		ECUX1H103ZFN	CHIP 50V 0.01U	1	
C529		ECUX1H103ZFN	CHIP 50V 0.01U	1	
C530		ECUX1E473ZFN	CHIP 25V 0.047U	1	
C531		ECEA0JK470	ELECTROLYTIC 6.3V 47U	1	
C532		ECUX1H220JCN	CHIP 50V 22P	1	
C533		ECUX1H470JCN	CHIP 50V 47P	1	
C534		ECEA1HK010	ELECTROLYTIC 50V 1U	1	
			INTEGRATED CIRCUITS		
IC501		AN3224K	IC	1	
IC502		AN3311S	IC	1	
			COILS		
L501		VLQEL05F101K	COIL 100UH	1	
L502		VLQEL05F121K	COIL 120UH	1	
L503		VLQEL05F181K	COIL 180UH	1	
L504		VLQEL05F100J	COIL 10UH	1	
L505		VLQEL05F101K	COIL 100UH	1	
L506		VLQEL05F330J	COIL 33UH	1	
L507		VLQEL05F470J	COIL 47UH	1	
			CONNECTORS		
P501		VJP1248T	CONNECTOR(MALE) 8P	1	
P502		VJP1233T	CONNECTOR(MALE) 6P	1	
			TRANSISTOR		
Q501		2SB709	TRANSISTOR CHIP	1	(Q,R,S)
			RESISTORS		
R501		ERJ6GMYJ102	CHIP 1/16W 1K	1	
R502		ERJ6GMYJ222	CHIP 1/16W 2.2K	1	
R503		ERJ6GMYJ222	CHIP 1/16W 2.2K	1	
R504		ERJ6GMYJ181	CHIP 1/16W 180	1	
R505		ERJ6GMYJ331	CHIP 1/16W 330	1	
R506		ERJ6GMYJ471	CHIP 1/16W 470	1	
R507		ERJ6GMYJ221	CHIP 1/16W 220	1	
R508		ERJ6GMYJ100	CHIP 1/16W 10	1	

Ref.No.		Part No.	Part Name & Description	Pcs	Remarks
R509		ERJ6GMYJ100	CHIP 1/16W 10	1	
R510		ERJ6GMYJ821	CHIP 1/16W 820	1	
R511		ERJ6GMYJ821	CHIP 1/16W 820	1	
R512		ERJ6GMYJ821	CHIP 1/16W 820	1	
R513		ERJ6GMYJ471	CHIP 1/16W 470	1	
R514		ERJ6GMYJ122	CHIP 1/16W 1.2K	1	
R515		ERJ6GMYJ102	CHIP 1/16W 1K	1	
R516		ERJ6GMYJ152	CHIP 1/16W 1.5K	1	
R517		ERJ6GMYJ681	CHIP 1/16W 680	1	
			VARIABLE RESISTORS		
VR501		EVND1AA00B23	VARIABLE 2K	1	
VR502		EVND1AA00B53	VARIABLE 5K	1	
			MISCELLANEOUS		
		VSC1832	SHIELD CASE (TOP)	1	
		VSC1833	SHIELD CASE (MAIN)	1	
		VSC1834	SHIELD CASE (BOTTOM)	1	
	■	VEP01272A	POWER C.B.A.		NV-G20PX/PN
		VEP01272D			NV-G19MX
					<!>
			CAPACITORS		
C1001		VCK0042	CERAMIC 470P	1	<!>
C1002		VCK0042	CERAMIC 470P	1	<!>
C1003		VCK0042	CERAMIC 470P	1	<!>
C1004		VCK0042	CERAMIC 470P	1	<!>
C1005		VCK0046	CERAMIC 1000P	1	<!>
C1006		VCK0046	CERAMIC 1000P	1	<!>
C1007		VCK0046	CERAMIC 1000P	1	<!>
C1008		VCK0046	CERAMIC 1000P	1	<!>
C1009		ECQU2A104MN	MYLAR 250V 0.1U	1	<!>
C1010		ECOS2GU101	ELECTROLYTIC 400V 100U	1	NV-G20PX/PN
C1010		ECEA2ES121	ELECTROLYTIC 250V 120U	1	NV-G19MX
C1011		ECQE6473MZ	MYLAR 630V 0.047U	1	
C1012		ECEA1CGE470	ELECTROLYTIC 16V 47U	1	
C1013		ECQV1H473JZ	MYLAR 50V 0.047U	1	NV-G20PX/PN
C1013		ECQV1H474JZ	MYLAR 50V 0.47U	1	NV-G19MX
C1014		ECQV1H333JZ	MYLAR 50V 0.033U	1	NV-G20PX/PN
C1014		ECQB1H222KH	MYLAR 50V 2200P	1	NV-G19MX
C1015		ECQM1682KZ	MYLAR 100V 6800P	1	NV-G20PX/PN
C1016		ECQM1472KZ	MYLAR 100V 4700P	1	NV-G20PX/PN
C1017		ECEB1EG100	ELECTROLYTIC 25V 10U	1	NV-G20PX/PN
C1018		ECEA1HGE470	ELECTROLYTIC 50V 47U	1	
C1019		ECEA1EGE102	ELECTROLYTIC 25V 1000U	1	
C1020		ECEA1EGE102	ELECTROLYTIC 25V 1000U	1	
C1022		ECEA1HGE470	ELECTROLYTIC 50V 47U	1	
C1023		ECEA1AGE102Z	ELECTROLYTIC 10V 1000U	1	
C1024		ECEA0JFE102X	ELECTROLYTIC 6.3V 1000U	1	
C1025		ECEA1HGE470	ELECTROLYTIC 50V 47U	1	
C1027		ECKD3D151KB	CERAMIC 2KV 150P	1	NV-G20PX/PN
C1027		ECKD2H471KB	CERAMIC 500V 470P	1	NV-G19MX
C1031		VCK0040	CERAMIC 1000P	1	<!>
C1032		VCK0040	CERAMIC 1000P	1	<!>
C1037		ECQU2A683MN	MYLAR 250V 0.068U	1	<!>
C1039		ECEA1CGE470	ELECTROLYTIC 16V 47U	1	NV-G20PX/PN
C1040		ECQP1101JZ	MYLAR 100V 1100P	1	
C1041		ECKF1H103ZF	CERAMIC 50V 0.01U	1	
C1042		ECKF1H103ZF	CERAMIC 50V 0.01U	1	
C1050		ECKF1H102KB	CERAMIC 50V 1000P	1	
C1051		ECKF1H221KB	CERAMIC 50V 220P	1	
C1052		ECKF1H221KB	CERAMIC 50V 220P	1	
C1053		VCK0042	CERAMIC 470P	1	
C1054		VCK0042	CERAMIC 470P	1	

Ref.No.		Part No.	Part Name & Description	Pcs	Remarks
			DIODES		
D1001		S1WBA60	DIODE	1	<!>
D1002		ERA22-08	DIODE	1	<!>
D1003		MA178	DIODE	1	NV-G20PX/PN
D1003		ERA22-02	DIODE	1	NV-G19MX
D1004		MA178	DIODE	1	NV-G20PX/PN
D1004		ERA22-02	DIODE	1	NV-G19MX
D1005		MA178	DIODE	1	NV-G20PX/PN
D1006		MA178	DIODE	1	NV-G20PX/PN
D1007		MA185	DIODE	1	<!>
D1008		MA185	DIODE	1	<!>
D1010		ERD32-01	DIODE	1	<!>
D1013		MA185	DIODE	1	<!>
D1015		ERA82-004	DIODE	1	<!>
D1016		ERA22-02	DIODE	1	<!>
D1019		MA165	DIODE	1	
D1024		MA178	DIODE	1	NV-G20PX/PN
D1025		MA178	DIODE	1	NV-G20PX/PN
D1026		MA4082H	DIODE	1	NV-G20PX/PN
D1028		MA4082	DIODE	1	
D1030		ENB461D-05A	SURGE ABSORBER 460V	1	
D1105		MA178	DIODE	1	NV-G19MX
			INTEGRATED CIRCUIT		
IC1001		STK5338	IC	1	
			COILS		
L1001		ELF18D410	COIL 41UH	1	<!>
L1002		ELC07D220	COIL 22UH	1	
			CONNECTOR		
P1001		VJS1903	CONNECTOR	1	
			TRANSISTORS		
Q1001		STR11006C	TRANSISTOR	1	NV-G20PX/PN <!>
Q1001		STR15006	TRANSISTOR	1	NV-G19MX <!>
Q1002		2SD638	TRANSISTOR	1	(Q,R,S) NV-G20PX/PN
Q1003		2SB643	TRANSISTOR	1	(Q) NV-G20PX/PN
			RESISTORS		
R1001		ERC12ZGK685	SOLID 1/2W 6.8M	1	NV-G20PX/PN <!>
R1001		ERC12ZGK275	SOLID 1/2W 2.7M	1	NV-G19MX <!>
R1002		ERF2AK2R2	WIRE WOUND 2W 2.2	1	NV-G20PX/PN
R1002		VSF0055		1	NV-G19MX
R1003		ERDS2TJ394	CARBON 1/4W 390K	1	
R1004		ERDS2TJ394	CARBON 1/4W 390K	1	
R1005		ERDS2TJ394	CARBON 1/4W 390K	1	
R1006		ERDS2TJ394	CARBON 1/4W 390K	1	
R1007		ERG3SJ683	METAL OXIDE 3W 68K	1	
R1008		ERF2AKR30	WIRE WOUND 2W 0.3	1	
R1009		ERD25FAJ100	CARBON 1/4W 10	1	NV-G20PX/PN
R1009		ERDS1TJ820	CARBON 1/2W 82	1	NV-G19MX
R1010		ERG12SJ470	METAL OXIDE 1/2W 47	1	NV-G20PX/PN
R1011		ERDS2TJ222	CARBON 1/4W 2.2K	1	NV-G20PX/PN
R1012		ERQ12HJ6R8P	FUSE 1/2W 6.8	1	<!>
R1014		ERD2FCJ4R7	CARBON 2W 4.7	1	<!>
R1015		ERQ12HKR56P	FUSE 1/2W 0.56	1	<!>
R1016		VSF0045	1/2W 6.8	1	
R1017		ERG12ANJ182	METAL OXIDE 1/2W 1800	1	
R1028		ERDS2TJ271	CARBON 1/4W 270	1	NV-G20PX/PN
			TRANSFORMER		

Ref.No.		Part No.	Part Name & Description	Pcs	Remarks
T1001		VLT0320	TRANSFORMER	1	<!>
			MISCELLANEOUS		
		VJF0318	FUSE HOLDER	4	<!>
		VMZ0730	CAPACITOR COVER	1	<!>
		VMZ0996	CAPACITOR COVER	1	<!>
		VMZ0955	RESISTOR COVER	1	NV-G20PX/PN <!>
		VMZ0820	CAPACITOR COVER	1	<!>
		VSC1831	SHIELD CASE	1	FOR Q1001
	■	VEP22063C	REMOTE CONTROL UNIT C.B.A.		
			CAPACITORS		
C1		ECKF1H471KB	CERAMIC 50V 470P	1	
C2		ECKF1H471KB	CERAMIC 50V 470P	1	
C3		ECEA0GKS101	ELECTROLYTIC 4V 100U	1	
			DIODE		
D1		LN66-S	LED	1	
			INTEGRATED CIRCUIT		
IC1		UPD6128C001	IC	1	
			COMBINATION PARTS		
			(TRANSISTOR & RESISTOR)		
QR1		UN1231	TRANSISTOR-RESISTOR	1	
			RESISTORS		
R1		ERDS2TJ1R0	CARBON 1/4W 1.0	1	
R2		ERDS2TJ682	CARBON 1/4W 6.8K	1	
			CRYSTAL OSCILLATOR		
X1		VSX0181	CRYSTAL OSCILLATOR	1	
			MISCELLENEOUS		
		VMD0911	LED HOLDER	1	
		VWJ0254	FLEXIBLE WIRE	1	
	■	VEP00H22A	CYLINDER DRIVE C.B.A.		
			CAPACITOR		
C2901		ECEA1VSN2R2	ELECTROLYTIC 35V 2.2U	1	
C2902		ECEA1VSN2R2	ELECTROLYTIC 35V 2.2U	1	
C2903		ECEA1VSN2R2	ELECTROLYTIC 35V 2.2U	1	
C2904		ECEA1HKSR22	ELECTROLYTIC 50V 22U	1	
C2905		ECEA1HKSR22	ELECTROLYTIC 50V 22U	1	
C2906		ECEA1HKSR22	ELECTROLYTIC 50V 22U	1	
C2907		ECEA1HKSR33	ELECTROLYTIC 50V 33U	1	
C2908		ECQV1H473JZ	MYLAR 50V 0.047U	1	

Ref.No.		Part No.	Part Name & Description	Pcs	Remarks
C2909		ECQV1H104JZ	MYLAR 50V 0.1U	1	
C2910		ECEA1CKS100	ELECTROLYTIC 16V 10U	1	
			INTEGRATED CIRCUIT		
IC2901		AN3812K	IC	1	
			RESISTOR		
R2901		ERX12ANJR68	METAL OXIDE 1/4V 0.68	1	
			CONNECTORS		
P2901		VJP1232	CONNECTOR	1	
P2902		VJP1927	CONNECTOR	1	
			MISCELLANEOUS		
		VSC1843	HEATSINK	1	
		VMA6884	MAIN HOLDER	1	
	■	VEPOOH30A	MECHANISM CONNECTION C.B.A.		
			CONNECTORS		
P1504		VJP1939	CONNECTOR	1	
P1505		VJP1242T	CONNECTOR	1	
			RESISTOR		
R1501		ERDS2TJ223	CARBON 1/4W 22K	1	
	■	VEPOOH31A	REEL SENSOR C.B.A.		
			INTEGRATED CIRCUIT		
IC1501		QN2170	IC	1	
			CONNECTOR		
P1506		VJP1242	CONNECTOR 2P	1	
	■	VXA2689	LED C.B.A. UNIT		
			DIODE		
D1501		GL450	PHOTO DIODE	1	
			MISCELLANEOUS		
		VMD0911	LED HOLDER	1	
		VWJ0254	FLEXIBLE WIRE	1	

Ref.No.		Part No.	Part Name & Description	Pcs	Remarks
	■	VEPOOH34A	PHOTO TR(T) C.B.A.		
			CAPACITOR		
C1502		ECKW1H102KBN	CERAMIC 50V 1000P	1	
			RESISTOR		
R1503		ERDS2TJ222	CARBON 1/4W 2.2K	1	
			CONNECTORS		
P1503		VJS1936	CONNECTOR	1	
P1508		VJP1242T	CONNECTOR	1	
			TRANSISTOR		
Q1502		PN150NV	PHOTO TRANSISTOR	1	
			MISCELLANEOUS		
		VMD0645	PHOTO TR HOLDER	1	
	■	VEPOOH35A	PHOTO TR(S) C.B.A.		
			CAPACITOR		
C1501		ECKW1H102KBN	CERAMIC 50V 1000P	1	
			TRANSISTOR		
Q1501		PN150NV	PHOTO TRANSISTOR	1	
			MISCELLANEOUS		
		VMD0645	PHOTO TR HOLDER	1	
	■	VEQ0536	RF CONVERTER		<!>
			DIODE		
D1		MA4062M	ZENER	1	
			INTEGRATED CIRCUIT		
IC1		AN3122	IC	1	
			TRANSISTORS		
Q1		2SC3130	TRANSISTOR	1	
Q2		2SC3130	TRANSISTOR	1	
Q3		2SC3130	TRANSISTOR	1	
Q4		2SC3130	TRANSISTOR	1	

Ref.No.		Part No.	Part Name & Description	Pcs	Remarks
			CRYSTAL OSCILLATOR		
X1		VSX0220	CRYSTAL OSCILLATOR	1	

Ref.No.		Part No.	Part Name & Description	Pcs	Remarks

5.VW-DS1P Mechanical Replacement Parts List

Note:1.* Be sure to make your orders of replacement parts according to this list.
2.IMPORTANT SAFETY NOTICE
Components identified with the mark <!> have the special characteristics for safety. When replacing any of these components,use only the same type.

Ref.No.		Part No.	Part Name & Description	Pcs	Remarks
1(1)		VYK1660	CASE UNIT	1	
2(1)		VGU3710	TRANSMISSION BUTTON	1	
3(1)		VGU3709	POWER SW KNOB	1	
4(1)		VJR0270	ELECTRODE (A)	1	
5(1)		VJR0271	ELECTRODE (B)	1	
6(1)		VJR0272	ELECTRODE (C)	1	
7(1)		VKF0900	BATTERY COVER	1	
8(1)		VMB1691	SUPPOT ANGLE	1	
9(1)		VKW0772	SMOKE FILTER	1	
10(1)		VSQ0533	SENSOR UNIT	1	
21(1)		VEQ0566	DIGITAL SCANNER	1	
22(1)		VPK0707	PACKING CASE	1	
23(1)		VFC0115	DIGITAL SCANNER CASE	1	
24(1)		VQC1022	DIGITAL SCANNER SHEET	1	
25(1)		VPN1913	CUHSION	1	
26(1)		VQT2335	OPERATING INSTRUCTIONS	1	

6. VW-DS1P Electrical Replacement Parts List

Note:1.* Be sure to make your orders of replacement parts according to this list.
2.IMPORTANT SAFETY NOTICE
Components identified with the mark <!> have the special characteristics for safety. When replacing any of these components,use only the same type.
3.Unless otherwise specified,
All resistors are in OHMS ,K=1,000 OHMS. All capacitors are in MICRO-FARADS(uf),P=uuF.
4.The P.C.Board units marked width'■'show below the main assembled parts.

Ref.No.		Part No.	Part Name & Description	Pcs	Remarks
	■	VEP66019F	DIGITAL SCANNER C.B.A.		
			CAPACITORS		
C01		ECEA0JK470	ELECTROLYTIC 6.3V 47U	1	
C02		ECEA1HKN010	ELECTROLYTIC 50V 1U	1	
C03		ECUX1E104ZFM	CHIP 25V 0.1U	1	
C04		ECUX1E104ZFM	CHIP 25V 0.1U	1	
C05		ECEA1HK010	ELECTROLYTIC 50V 1U	1	
C06		ECEA1AKA470	ELECTROLYTIC 10V 47U	1	
C07		ECUX1H330JCN	CHIP 50V 33P	1	
C08		ECUX1H330JCN	CHIP 50V 33P	1	
C09		ECUX1H103ZFN	CHIP 50V 0.01U	1	
			DIODES		
D01		MA151WK	DIODE	1	
D02		MA151WK	DIODE	1	
D03		MA151WK	DIODE	1	
D04		MA151WK	DIODE	1	
D05		MA153	DIODE	1	
D06		SE303AY	DIODE	1	
			INTEGRATED CIRCUITS		
IC01		UPD49HG88022	IC	1	
IC02		UPC324G2-T2	IC	1	
IC03		NJM78L02AA	IC	1	
			COIL		
L01		ELT3K017A	COIL	1	
			CONNECTOR		
P01		VJP1229T	CONNECTOR	1	
			TRANSISTORS		
Q01		2SB710	TRANSISTOR	1	(Q,R,S)
Q02		2SB710	TRANSISTOR	1	(Q,R,S)
Q03		2SB709	TRANSISTOR	1	(Q,R,S)
Q04		2SD601	TRANSISTOR	1	(Q,R,S)
			RESISTORS		
R01		ERJ6GMYJ470	CHIP 1/16W 47	1	
R02		ERJ6GMYJ102	CHIP 1/16W 1K	1	
R03		ERJ6GMYJ153	CHIP 1/16W 15K	1	
R04		ERJ6GMYJ332	CHIP 1/16W 3.3K	1	
R05		ERJ6GMYJ202	CHIP 1/16W 2K	1	
R06		ERJ6GMYJ244	CHIP 1/16W 240K	1	
R07		ERJ6GMYJ162	CHIP 1/16W 1.6K	1	
R09		VER66019BR09		1	
R10		ERJ8GCYK106	CHIP 1/8W 10M	1	
R11		ERJ6GMYJ105	CHIP 1/16W 1M	1	
R12		ERJ8GCYK106	CHIP 1/8W 10M	1	
R13		ERJ6GMYJ361	CHIP 1/16W 360	1	
R14		ERJ6GMYJ682	CHIP 1/16W 6.8K	1	
R15		ERJ6GMYJ332	CHIP 1/16W 3.3K	1	
R16		ERJ6GMYJ682	CHIP 1/16W 6.8K	1	

Ref.No.		Part No.	Part Name & Description	Pcs	Remarks
R17		ERJ6GMYJ682	CHIP 1/16W 6.8K	1	
R18		ERDS2EJ6R8	CARBON 1/4W 6.8	1	
R20		ERJ6GMYJ104	CHIP 1/16W 100K	1	
R23		ERJ6GMYJ682	CHIP 1/16W 6.8K	1	
R24		ERJ6GMYJ102	CHIP 1/16W 1K	1	
			SWITCHES		
SW01		VSS0211	SWITCH	1	
SW02		VSP0221	SWITCH	1	
			CRYSTAL OSCILLATORS		
X01		VSX0233	CRYSTAL OSCILLATOR	1	
X02		VSQ0552	BUZZER	1	

Digital Scanner

VW-DS1P

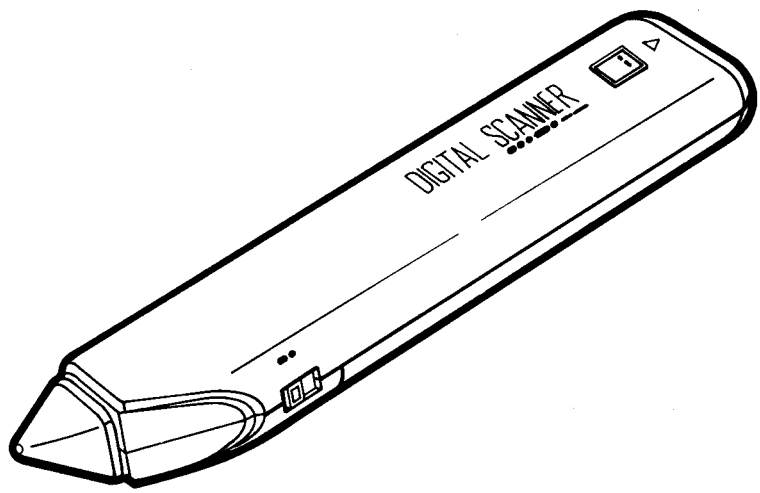

ITEM	SPECIFICATION
POWER SOURCE	DC 6V
DIMENSIONS	20.5(W)×31(H)×157(D)mm
WEIGHT	45g (without batteries)
ACCESSORIES	1PC. Programe Sheet 4PC. Batteries

Weight and dimensions are appvoximate.
Specifications are subject to change without notice.

CONTENTS

SPECIFICATIONS ..... Cover
OPERATING INSTRUCTIONS 2
DIGITAL SCANNER SCHEMATIC DIAGRAM 4
DIGITAL SCANNER C.B.A.(VEP66019F) 4
EXPLODED VIEW 5

OPERATING INSTRUCTIONS

Digital Scanner

This Digital Scanner lets you programe timer recordings by tracing the corresponding bar codes on the supplied program ing Sheet and then transmitting the data to the VTR.

OPERATING INSTRUCTIONS

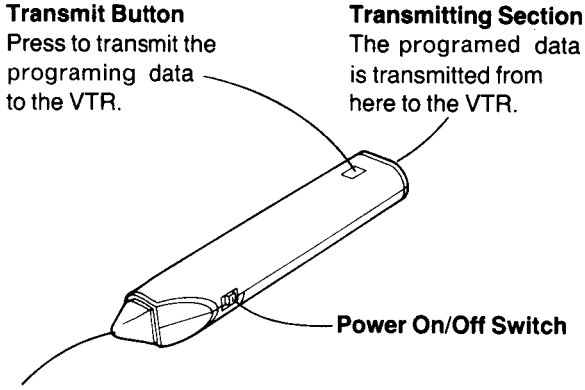

How to Operate the Digital Scanner

Before using the Digital Scanner, batteries must be inserted.

Turning the Digital Scanner On

Set Power On/Off Switch to "ON".

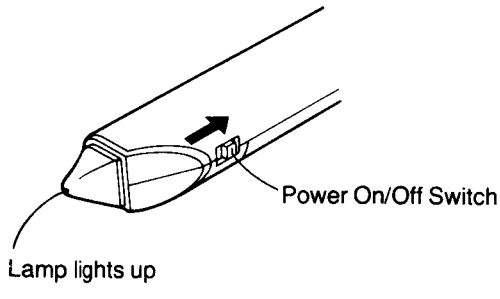

- If no operation is performed for more than 25 seconds, the scanner will automatically switch over to the power-saving standby condition and the lamp will go off. (In this case, if bar codes have already been read but not yet transmitted to the VTR, the data will be cancelled.)
- When the Power On/Off Switch is set to "ON" but the lamp is not lit, set the switch to "OFF" and then to "ON" again.

Tracing the Bar Codes

Ⓐ Place the Digital Scanner vertically on the Small Box.

Ⓑ Trace the bar code quickly in the direction of the arrow.

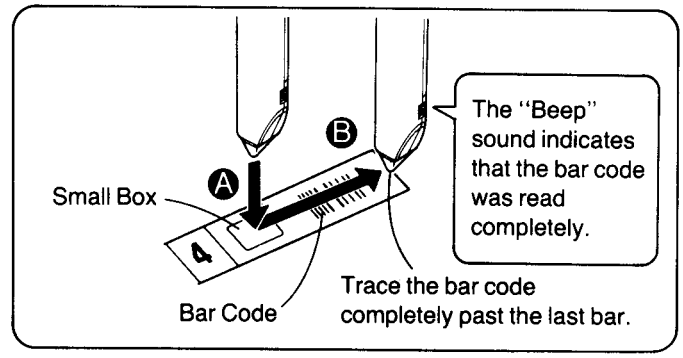

- If the bar code is traced slowly, it cannot be read correctly.
- When there is no "Beep" sound, the reading of the bar code is incomplete. Trace the bar code again.
- When using the programing Sheet, put it on a flat surface. Reading bent the bar codes or reading them whilst holding them in your hand may cause incorrect operation.
- Do not deviate from the bar code, nor stop tracing halfway.
- Do not slant the scanner to trace the bar code.

Programing a Timer Recording

Example: When programing timer recording for a programme that will be broadcast on channel position 4 on the 3rd of the month, from 7:00 to 7:30, trace the bar codes in the order of the numbered arrows shown below.

❶ Trace the bar code for "CHANNEL".

❷ Trace the bar code for "DATE".

❸ Trace the bar code for "START TIME".

❹ Trace the bar code for "END TIME".

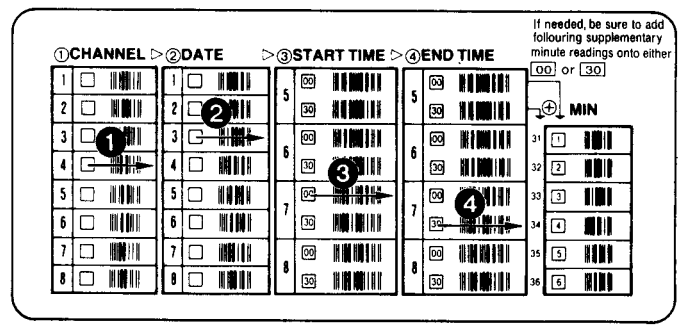

- The "Bee Bee Bee Bee Beeeeep" sound signals that the scanner is now ready for data transmission.
- When no sound is heard, read the bar codes once again.
- If more than one bar code is traced in the same group, only the last tracing will be effective.
- The bar codes for the time from "0:00" (midnight) to "4:59" in the morning are on the back of the programing Sheet.
- If the "CANCEL" bar code is read, all bar codes that have been read so far will be cancelled.

❺ Keep pressing the Transmit Button and confirm that the programed data on the Multi-Function Display of the VTR are as desired.
After releasing the button, the data will continue to be displayed for about 12 seconds.

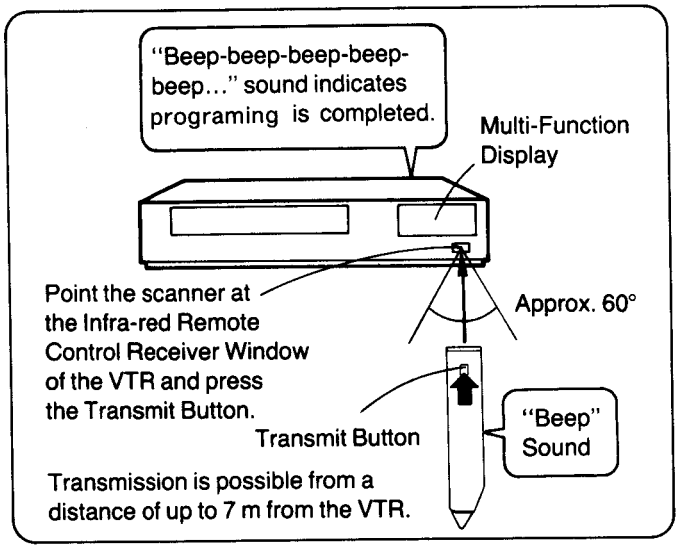

- If the transmission was not received correctly, the "Beep-Beep, Beep-Beep" sound from the VTR will warn you. In this case, perform transmission again.
- The transmission is possible when the VTR is turned on but is not in any of the recording or playback operation modes. It is also possible when the VTR is in the timer recording standby mode ([⏲] indication is lit).
- The programing will be done on the next lower unoccupied timer programe number (7~1).
  If all programe numbers are occupied, the "Beep-Beep, Beep-Beep" sound from the VTR will warn you that the programing cannot be made.
- When the Transmit Button is pressed, the VTR will automatically be put into the timer recording standby condition and the VTR will be turned off.
- To operate the VTR before the timer recording will be performed, press the Timer Rec. Button to suspend the timer recording standby condition. After using the VTR, be sure to press the Timer Rec. Button again, otherwise the timer recording will not be made.

For Programing More Than One Timer Recording in Succession

Repeat the following operation steps ①–③.

① Trace the "CANCEL" bar code on the programing Sheet.

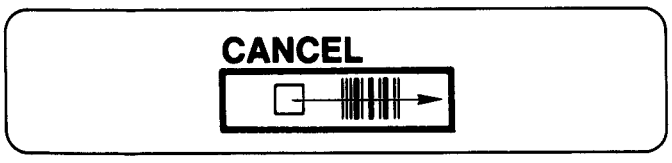

② Trace the bar codes for "CHANNEL", "DATE", "START TIME" and "END TIME".

③ Confirm that the present time is displayed on the Multi-Function Display of the VTR, and transmit the data.
- If the next timer programing data are transmitted while the previous timer programing data are still being displayed, the displayed timer recording data will be cancelled.

How to Trace the Bar Codes for Start and End Times

There are two kinds of time bar codes on the programing Sheet: time bar codes selectable in 30-minute steps and in 1-minute steps.

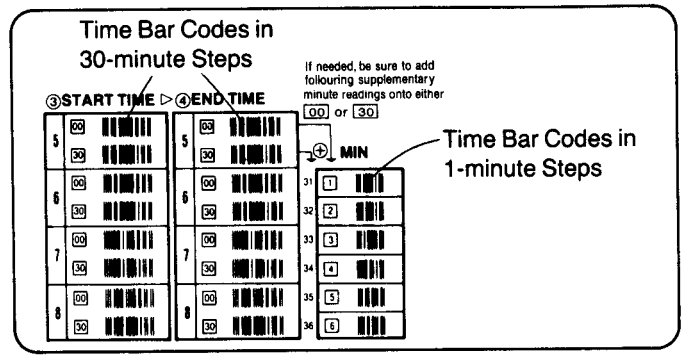

① Setting the Time in 30-minute Steps

- Trace the appropriate bar code in the 30-minute-step column only.

For example: when setting to "9:00"

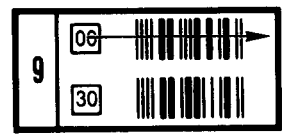

For example: when setting to "9:30"

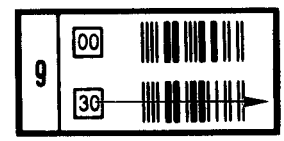

② Setting the Time in 1-minute Steps

- When setting to a minute between 1 and 29, trace the appropriate "+MIN" bar code after tracing the [00] bar code.

For example: when setting to "9:12"

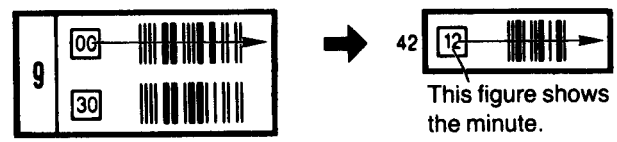

- When setting to a minute between 31 and 59, trace the appropriate "+MIN" bar code after tracing the [30] bar code.

For example: when setting to "9:42"

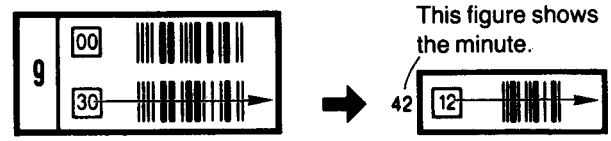

- When a timer bar code with [00] or [30] minutes is traced for the end time, the "Bee Bee Bee Bee Beeeeep" sound which indicates reading completion is heard. When subsequently tracing a "+MIN" bar code after tracing [00] or [30] to choose another minute setting, the reading completion sound will be heard again.

For Everyday Recording

① Turn on the Digital Scanner and trace the "CHANNEL" bar code.

② Trace the "EVERYDAY" bar code.

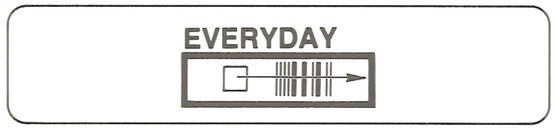

③ Trace the "START TIME" and then the "END TIME" bar codes, and transmit the data to the VTR.
- Everyday recording will be performed from that day on.
- If a "DATE" bar code is traced after tracing the "EVERY-DAY" bar code, everyday recording will not be performed.

For Everyweek Recording

① Turn on the Digital Scanner and trace the "CHANNEL" bar code.

② Trace the bar code for the desired day of the week among the "EVERYWEEK" bar codes.

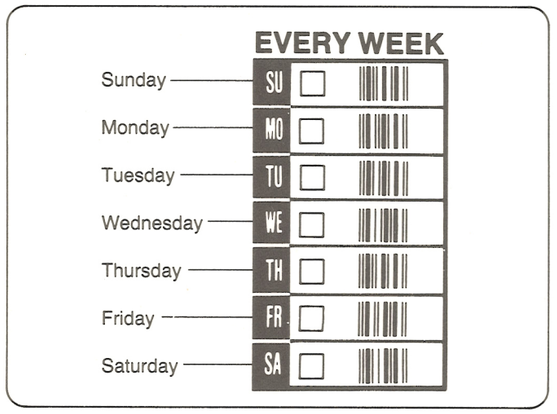

③ Trace the "START TIME" and then the "END TIME" bar codes, and transmit the data to the VTR.
- Everyweek recording will be performed from that week on.
- If a "DATE" bar code is traced after tracing the "EVERY-WEEK" bar code, everyweek recording will not be performed.

To Confirm the Programe of a Timer Recording

To perform this operation, the VTR must be turned on or it must be in the timer recording standby mode (◷ indication is lit).

① Trace the "CHECK" bar code.

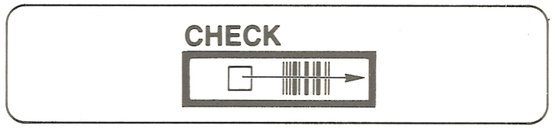

② Perform transmission.
- After releasing the Transmit Button, the programed data will be displayed for about 8 seconds (for about 25 seconds, if the ◷ indication is not lit) on the Multi-Function Display.
- At every push of the Transmit Button, the timer progra - me number advances to the next higher number.

To Cancel a Programed Timer Recording

To perform this operation, the VTR must be turned on but not be in any of the recording or playback operation modes, or it must be in the timer recording standby mode (◷ indication is lit). To cancel a programed timer recording, its data must be displayed on the Multi-Function Display. If they are no longer displayed, first, trace the "CHECK" bar code and perform transmission (several times, if necessary, until the programe you want to cancel is displayed).
Then, within 8 seconds (within 25 seconds, if the ◷ indication is not lit):

① Trace the "CANCEL" bar code.

② Perform transmission.
- To programe a new timer recording, perform the programing from the beginning.

DIGITAL SCANNER SCHEMATIC DIAGRAM
— Unit No: VEQ0566 —

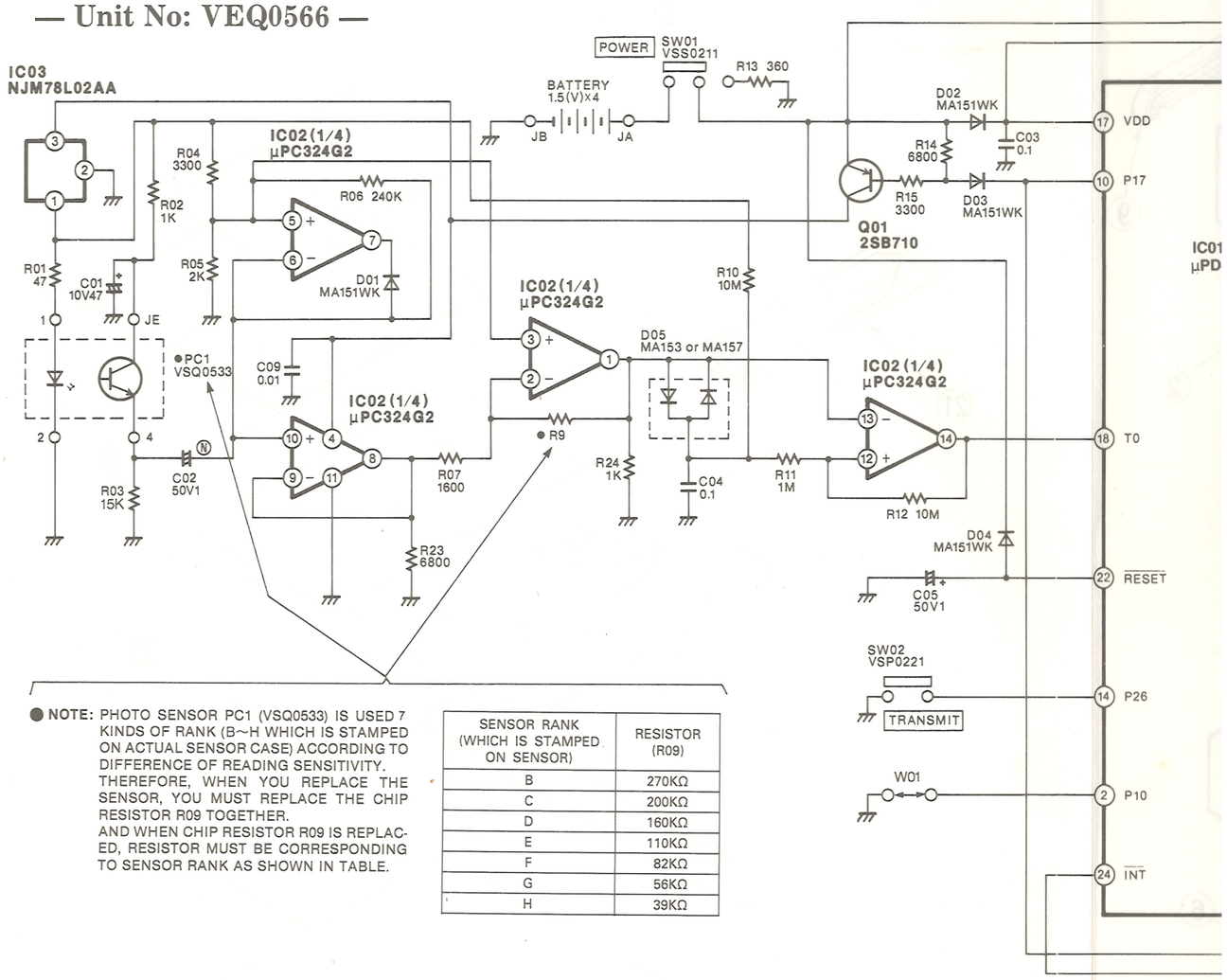

● **NOTE:** PHOTO SENSOR PC1 (VSQ0533) IS USED 7 KINDS OF RANK (B~H WHICH IS STAMPED ON ACTUAL SENSOR CASE) ACCORDING TO DIFFERENCE OF READING SENSITIVITY. THEREFORE, WHEN YOU REPLACE THE SENSOR, YOU MUST REPLACE THE CHIP RESISTOR R09 TOGETHER.
AND WHEN CHIP RESISTOR R09 IS REPLAC-ED, RESISTOR MUST BE CORRESPONDING TO SENSOR RANK AS SHOWN IN TABLE.

SENSOR RANK (WHICH IS STAMPED ON SENSOR)	RESISTOR (R09)
B	270KΩ
C	200KΩ
D	160KΩ
E	110KΩ
F	82KΩ
G	56KΩ
H	39KΩ

DIGITAL SCANNER C.B.A. (VEP66019F)

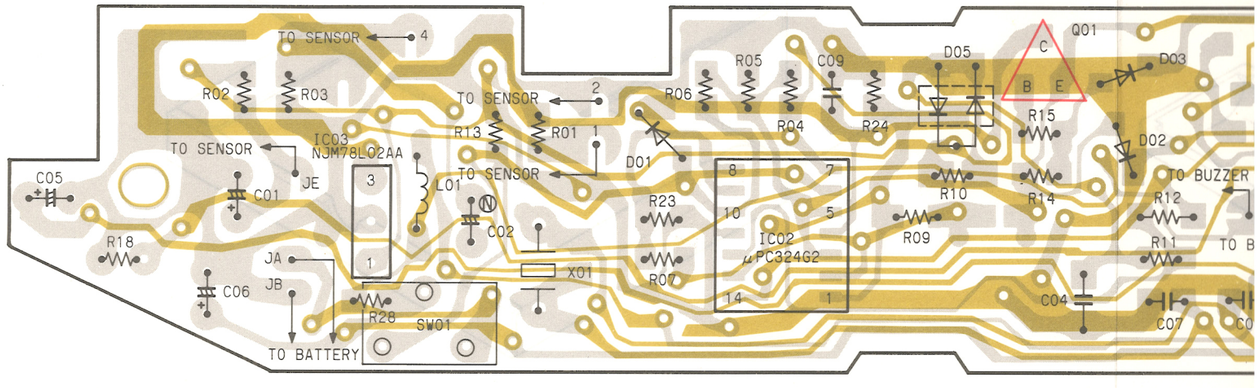

DIGITAL SCANNER SCHEMATIC DIAGRAM
— Unit No: VEQ0566 —

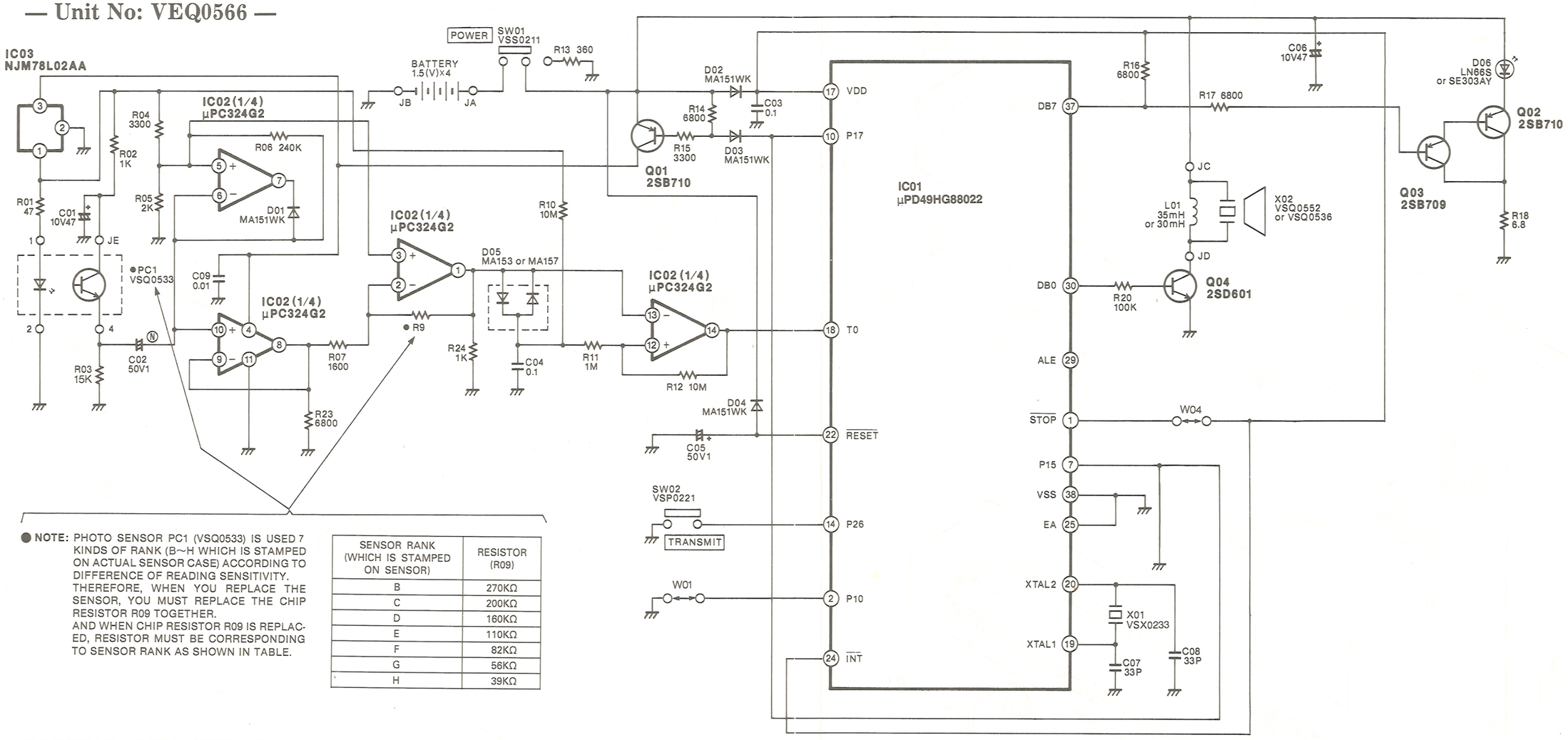

● **NOTE:** PHOTO SENSOR PC1 (VSQ0533) IS USED 7 KINDS OF RANK (B~H WHICH IS STAMPED ON ACTUAL SENSOR CASE) ACCORDING TO DIFFERENCE OF READING SENSITIVITY. THEREFORE, WHEN YOU REPLACE THE SENSOR, YOU MUST REPLACE THE CHIP RESISTOR R09 TOGETHER.
AND WHEN CHIP RESISTOR R09 IS REPLACED, RESISTOR MUST BE CORRESPONDING TO SENSOR RANK AS SHOWN IN TABLE.

SENSOR RANK (WHICH IS STAMPED ON SENSOR)	RESISTOR (R09)
B	270KΩ
C	200KΩ
D	160KΩ
E	110KΩ
F	82KΩ
G	56KΩ
H	39KΩ

DIGITAL SCANNER C.B.A. (VEP66019F)

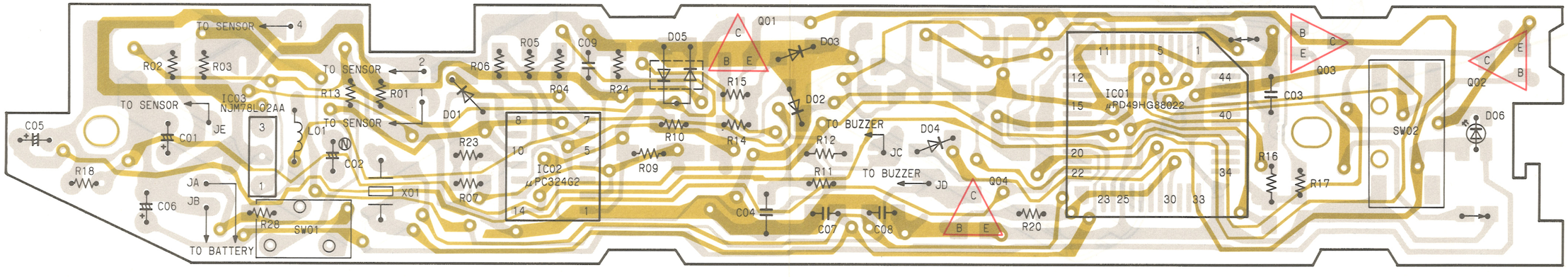

❶ DIGITAL SCANNER PARTS SECTION

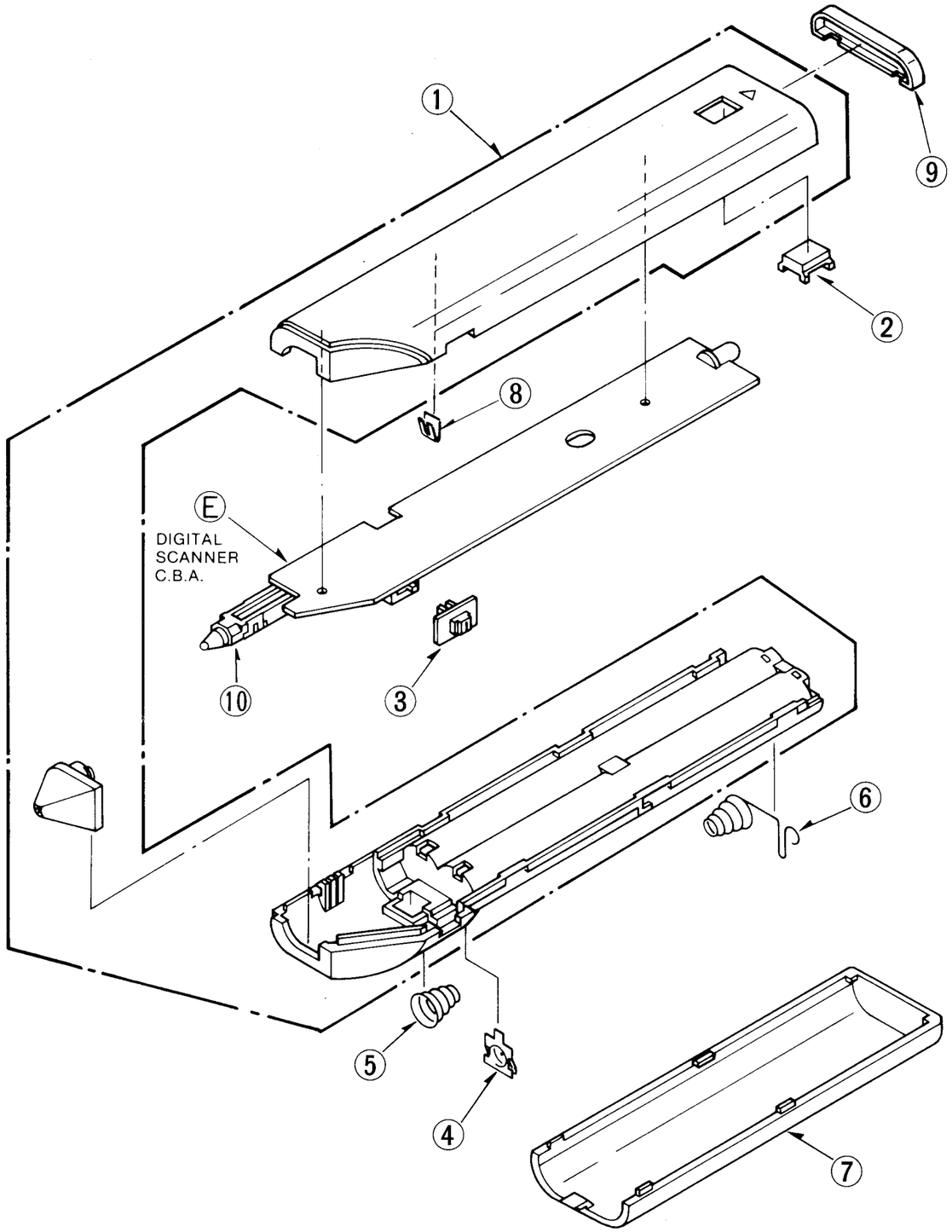
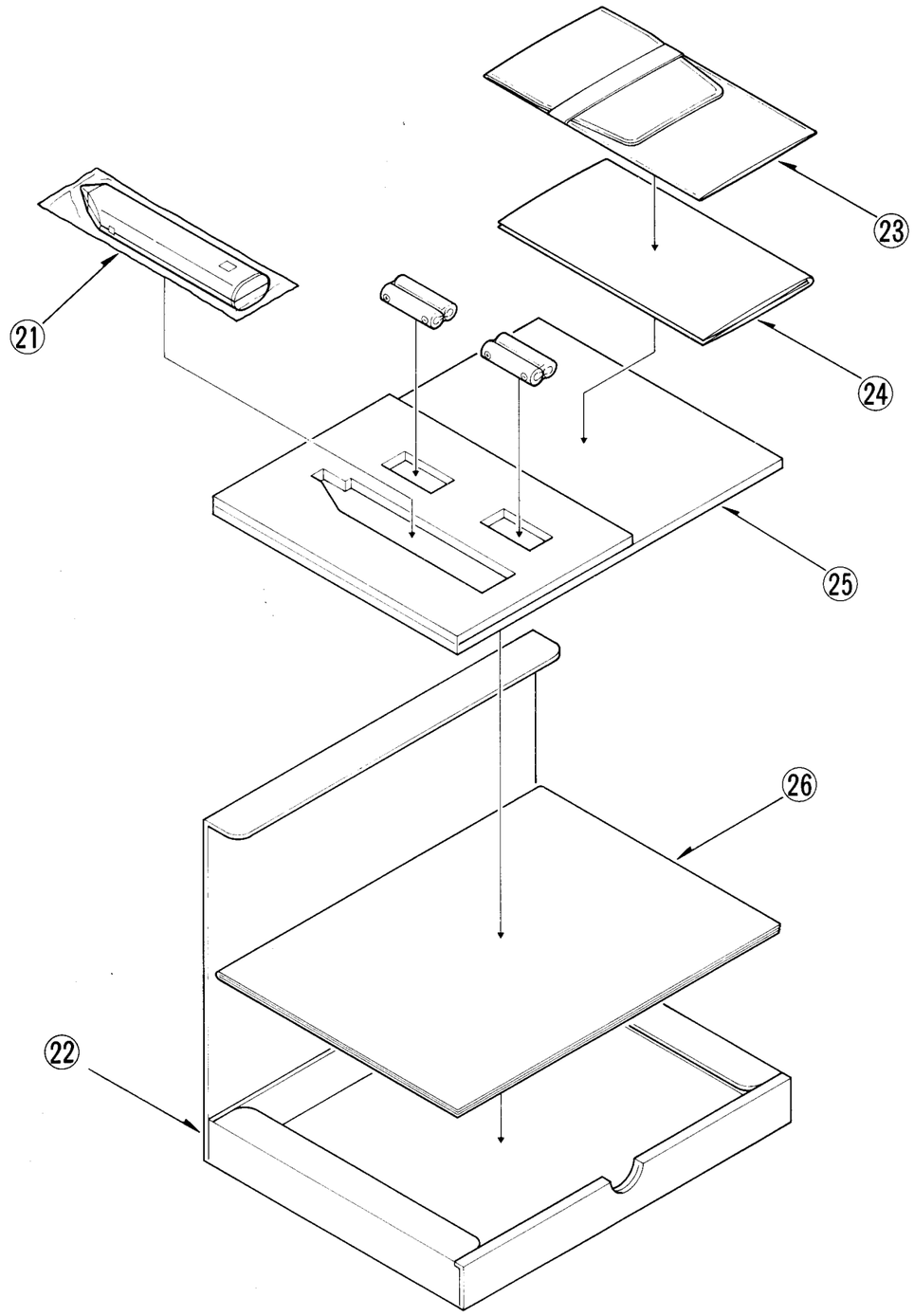
❷ PACKING PARTS SECTION